Cold Rack / Refrigerated Display Cabinets

Presentation of Cold Food & Beverages

Installation and programming manual
(for appliances from 2015 onwards)

Attention:
This manual is intended for service technicians, shopfitters and refrigeration specialists only!

Contents

1 Installation and commissioning 4
1.1 Acceptance 4
1.2 Place of installation 4
1.3 Preparation....5
1.4 Mobile version 5
1.5 Installation options....5
1.6 Connection to the customer's integrated system....5
1.7 Possible installation of the control panel for the installation variant....6
1.8 Step-by-step instructions for installation and commissioning 9
1.9 Functionality of the showcase, air ducts 10
1.10 Avoiding the worst error in installation 11
1.11 Two installation options 12
1.12 Air routing for self-cooled appliances....12
1.13 Drawings and technical data....14
1.14 Installation and mounting instructions for wall positioning....14
2 General information concerning the control unit 14
2.1 Product description....14
2.2 Control box circuit diagram....15
2.3 Operating panel (display) 16
2.4 Wiring diagram 17
3 Parametrisation....18
3.1 Description of the operating keys....19
3.2 Parametrisation information....20
3.3 Status displays and error messages....26
3.4 Technical data for display:....27
4 Technical data of the control system 28
4.1 ST-Box parameter groups 28
4.2 Most important variable parameter values, basic parameters....29
4.3 Status messages....41
4.4 Error messages....41
4.5 Parameter description 42
4.6 Technical data for control box ST 200 52
5 Customer service 53

Beer Grill AG
Allmendstrasse 7
CH – 5612 Villmergen,
Switzerland
Tel. +41 56 618 7800
Fax +41 56 618 7849

Beer Grill GmbH
Körnerstrasse 14 a
D – 79539 Lörrach,
Germany
Tel. +49 71 61 659 876
Fax +49 71 61 659 879

info@beergrill.com
www.beergrill.com

Subject to technical changes without prior notice
Before installing and putting the refrigerated cabinets into operation, please read these instructions carefully and strictly follow the information it contains. They contribute to the professional installation and function of the refrigerated cabinet.

Failure to observe these instructions may void the warranty!

Indicates all instructions that are important for safety. Failure to observe them can lead to injury, damage to the appliance or to equipment!

Beer Grill AG
Allmendstrasse 7
CH – 5612 Villmergen,
Switzerland
Tel. +41 56 618 7800
Fax +41 56 618 7849

Beer Grill GmbH
Körnerstrasse 14 a
D – 79539 Lörrach,
Germany
Tel. +49 71 61 659 876
Fax +49 71 61 659 879

info@beergrill.com
www.beergrill.com

1 Installation and commissioning

1.1 Acceptance

After a final inspection, our appliances are safely packaged in order to arrive in good condition. Nevertheless, we ask you to inspect the appliances for transport damage when they are received.

Should you find any damage, please note this on the shipper's papers and on your form and have the damage confirmed. If the damage does not appear until after unpacking, you must inform us immediately of the damage in writing. It is advisable to inform your supplier in advance by telephone.

After inspection, we recommend packing the appliances again to prevent damage during any intermediate storage or further transport.

The transport is at your own risk; if you do not report transport damage in due time, your claim for settlement will expire.

1.2 Place of installation

The refrigerated appliances should be installed in such a way that draughts are avoided or kept to a minimum. Refrigerated appliances should not be installed near doors or in areas where they are exposed to considerable air circulation, e.g. outlet openings of air conditioning, ventilation and heating systems.

When designing the ventilation systems, the air velocity and air flow direction above the refrigerated appliance should be taken into account. Special attention should be paid to the outlet openings of warm air heating systems.

Heat radiation and lighting

In order to minimise the adverse effects of radiant heat, it is important to ensure that the refrigerated appliances are not exposed to solar radiation, air distributors and ducts, uninsulated roofs or walls heated by solar radiation or other sources of heat. Heat radiation entering the refrigerated appliance leads to greater operating costs and poor performance. Spotlights or other concentrated lighting fixtures should not be directed into the appliance.

Avoid steam-generating appliances in the vicinity. This can lead to heavy icing of the evaporator, thus reducing its capacity.

For installation, choose a room that is well ventilated and low in dust. The function of the refrigerated appliance is only assured if a relative humidity of max. 65 % and a room temperature of 26 °C are not constantly exceeded.

i

Correct installation and trouble-free operation are prerequisite for commissioning the refrigerated cabinet. The installation must comply with local refrigeration, electrical, safety and hygiene regulations.

1.3 Preparation

The refrigerated showcases are easy to install with a minimum of tools and can be placed on any type of substructure/floors that are strong enough.

For protection, the refrigerated showcase has been provided with a working plastic protective film. Remove this from the refrigerated appliance. Your refrigerated appliances should work efficiently.

Any qualified person can complete the major part of the installation. However, all electrical installations must be carried out by a qualified electrician. Ensure that suitable personnel and tools are available to prevent damage and injury.

All appliances require a 230 volt power supply. The settings for the appliances can be found in the enclosed programming manual. As a result of condensation, all refrigerated appliances must have an external condensation drain or a condensation tray.

1.4 Mobile version

In the case of mobile appliances, the castors must be braked after the appliance has been placed in its final position.

1.5 Installation options

The appliances can be placed in a niche provided by the customer. The appliance can be placed directly on the floor or on an elevated surface. Note that a service door as well as access to the cooling unit and control system are provided on the customer side.

For the dimensions of the appliance, please refer to the order or the attached product sheets.

Before fixing the refrigerated appliance in place, check again that it is correctly aligned. The condensation drain must be the lowest point in the inner tank. Check that water can drain out from the inside of the tank.

1.6 Connection to the customer's integrated system

In the case of centrally cooled appliances, the solenoid valve must be provided by the customer. Beer Grill attaches the corresponding electrical valve and the injection nozzle separately to the appliance for customer connection to the integrated system.

1.7 Possible installation of the control panel for the installation variant

For ready-to-connect refrigeration appliances, the control panel is mounted under the cooling tank on the side of the compressor unit. In the case of centrally cooled appliances, the control system (including the connector plug) is mounted flat under the showcase tank. The display is enclosed separately.

Each control system consists of the operating panel (display) and the power electronics. The operating panel is connected to the power electronics via a 2-m ST bus cable.

The operating panel is built for installation in a control panel, front-side stainless steel panelling.

External dimensions	125 x 60 mm
Panel mounting cutout	102.2 x 52.5 mm, see drawing
Installation depth	22 mm (without bus mating connector) with plug approx. 50 mm

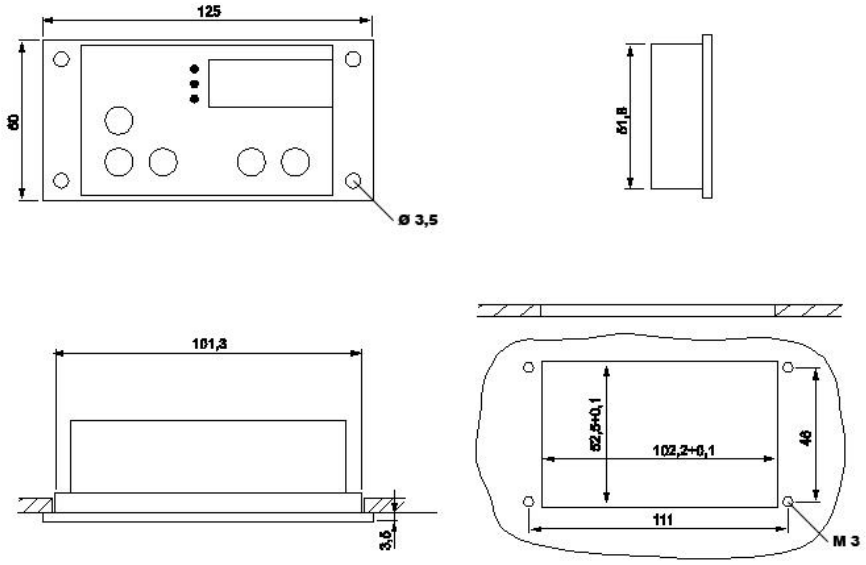

Dimensions of the power electronics

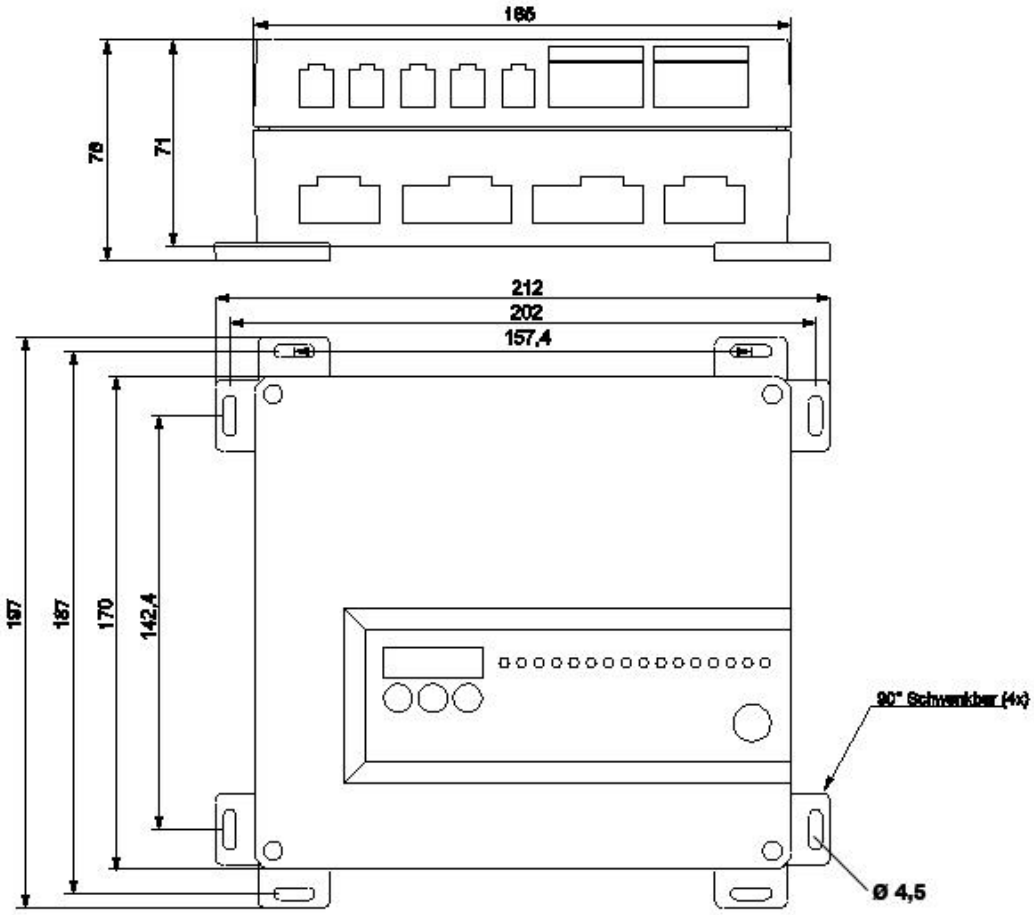

Beer Grill AG
Allmendstrasse 7
CH – 5612 Villmergen,
Switzerland
Tel. +41 56 618 7800
Fax +41 56 618 7849

Beer Grill GmbH
Körnerstrasse 14 a
D – 79539 Lörrach,
Germany
Tel. +49 71 61 659 876
Fax +49 71 61 659 879

info@beergrill.com
www.beergrill.com

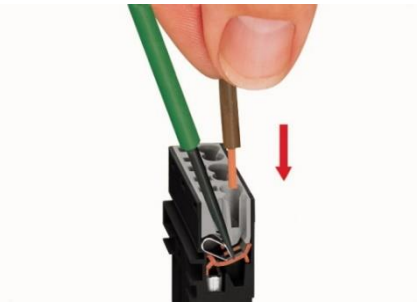

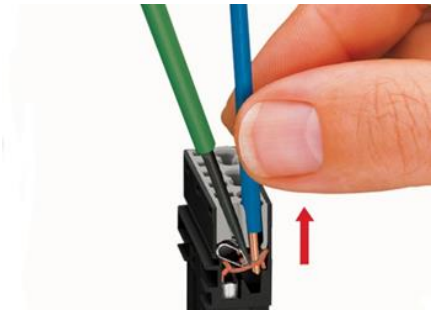

Use a screwdriver (2.5 mm) for wiring.

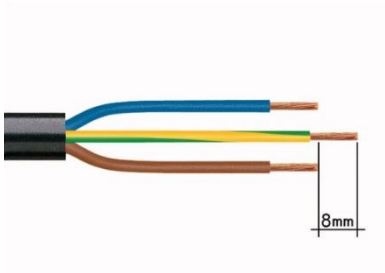

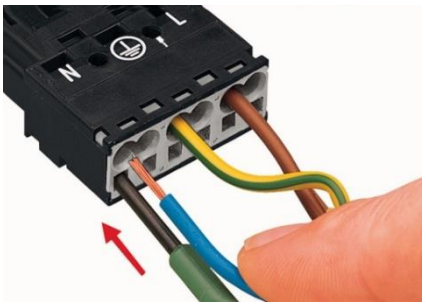

For safety reasons, extend the PE cable (green/yellow) by 8 mm.

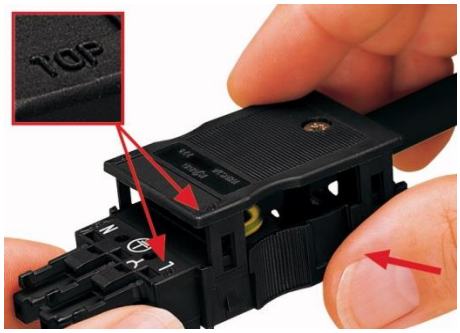

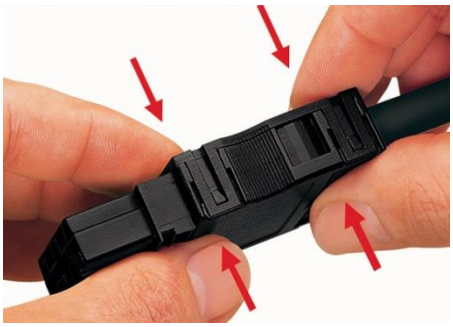

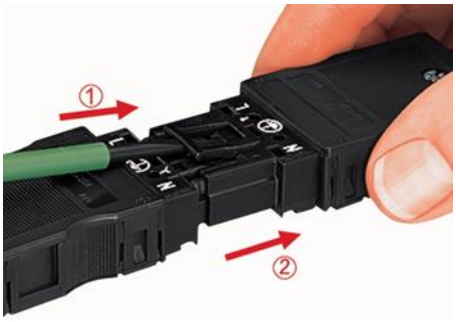

The plugs snap in. Use a screwdriver to disconnect them.

Beer Grill AG
Allmendstrasse 7
CH – 5612 Villmergen,
Switzerland
Tel. +41 56 618 7800
Fax +41 56 618 7849

Beer Grill GmbH
Körnerstrasse 14 a
D – 79539 Lörrach,
Germany
Tel. +49 71 61 659 876
Fax +49 71 61 659 879

info@beergrill.com
www.beergrill.com

1.8 Step-by-step instructions for installation and commissioning

Unpacking

Each appliance is delivered packed in a wooden/cardboard crate. Position the appliance as close to the final location as possible and remove the transport packaging, adhesive tapes and plastic protection films. Involve a second person to help prevent the appliance from tipping over.

Preparations at the place of installation

Make sure that the place of installation, furniture panels and counters are prepared according to the technical specifications. When installing the appliance in its location, protect the surface from possible damage during installation.

The appliance must be aligned horizontally.

Main installation

In any case, the assistance of another person is required to guide the cables of the control panel and the power supply in order to avoid pinching the cables when the appliance is set down.

After installation and mounting, make sure that the cooling unit is accessible for service and repair purposes.

When the appliance has been positioned correctly, it must be levelled horizontally using the levelling feet.

Voltage

Before connecting the appliance, compare the operating voltage indicated on the rating plate with the local power supply.

Possibility of disconnecting from the mains

If a connector plug is used for the mains connection, the socket must be easily accessible in order to disconnect the appliance from the mains when necessary (for cleaning or maintenance work).

If direct cabling is used, it must be possible to disconnect the appliance from the mains if necessary.

Attention: Condensation disposal

Since your appliance operates in an open area, the daily amount of condensation can be up to 10 litres. The condensation water must be drained by the customer (HD 52 connecting pipe). An odour trap (syfon) is required. If a drainage outlet by the customer is not possible, use the condensation tray that must be emptied manually.

1.9 Functionality of the showcase, air ducts

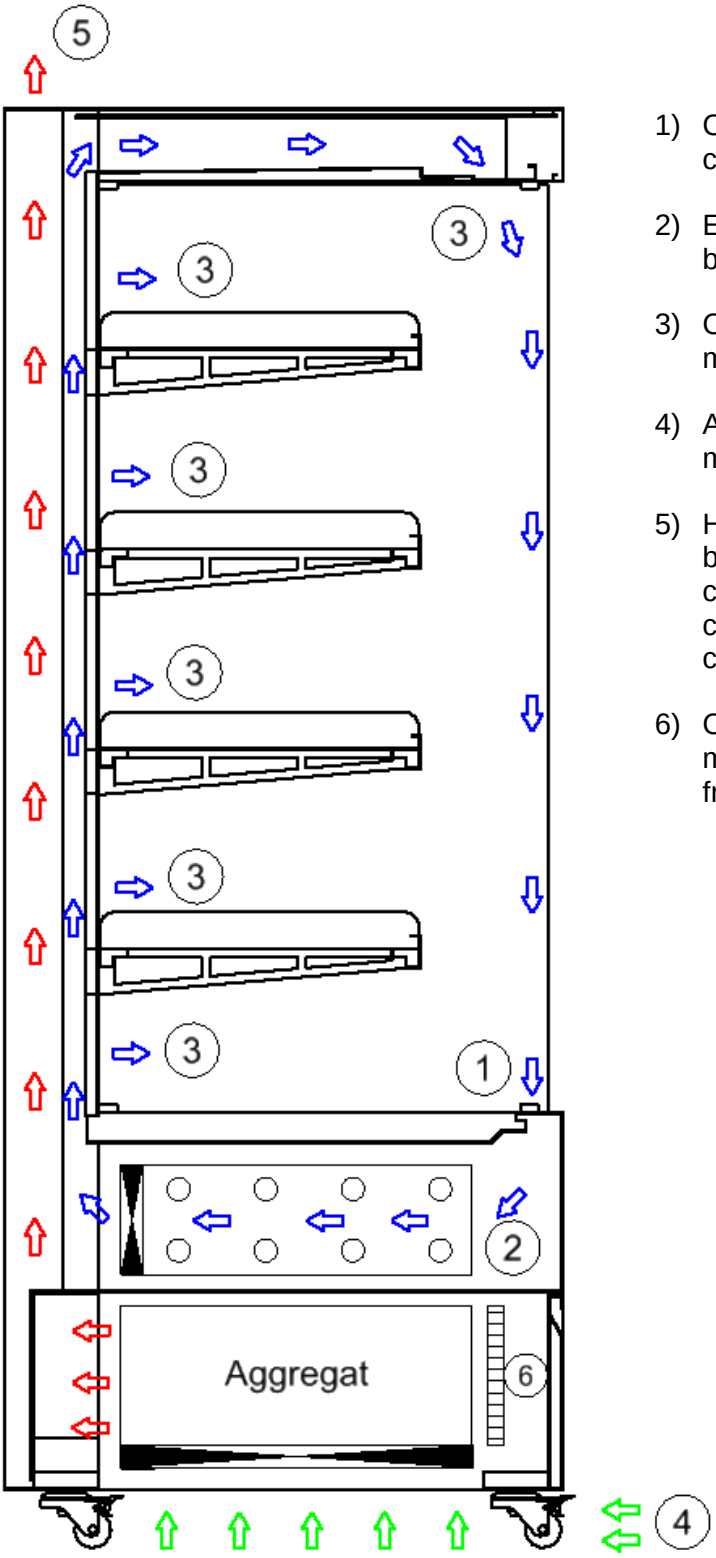

1) Cold air intake, must always be kept clear.

2) Evaporator (cold exchanger), must not be iced up or dusty.

3) Cold air discharge from the rear wall, must not be completely blocked.

4) Ambient air intake, for cooling the unit, must not be blocked.

5) Hot air outlet from the unit must always be guaranteed. Otherwise the heat cannot be dissipated and the showcase cannot provide the required cooling capacity.

6) Cooling honeycomb ambient air intake, must always be kept clean and dust-free.

1.10 Avoiding the worst error in installation

Correct ventilation of the cooling unit in ready-to-connect appliances is an essential point for proper functioning of the refrigerated cabinets. The energy extracted from the area around the goods and the heat generated by the unit's electrical energy absorption must be dissipated from the cooling unit – this is the only way the refrigeration circuit can function.

A) Cooling unit
The unit pumps the gaseous refrigerant through the cooling system.

B) FAN
The fan draws in cold ambient air that cools the unit and the hot gas in the condenser.

C) CONDENSER
This is a heat exchanger that releases the heat extracted from the cooling area back into the circulating air. Gaseous refrigerant is liquefied again by the heat dissipation.

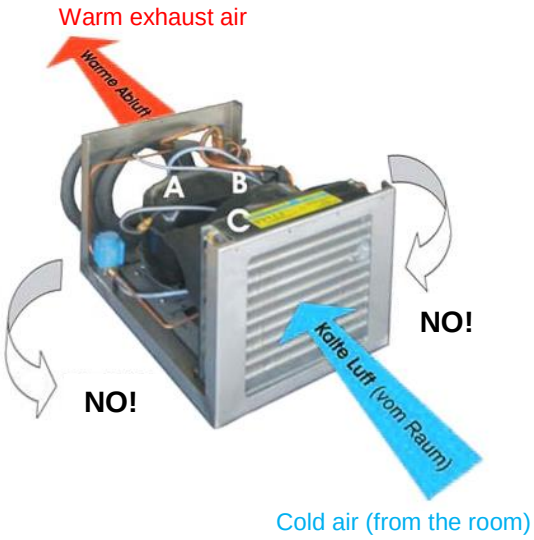

Avoid heated exhaust air being mixed with cold air from the surroundings and sucked into the appliance again. If the heat generated by the unit and refrigerant is no longer led away (thermal short circuit), the refrigerated appliance will not function properly.

1.11 Two installation options

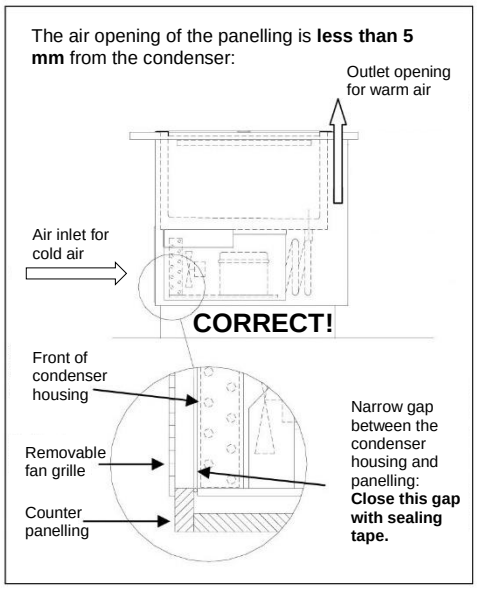

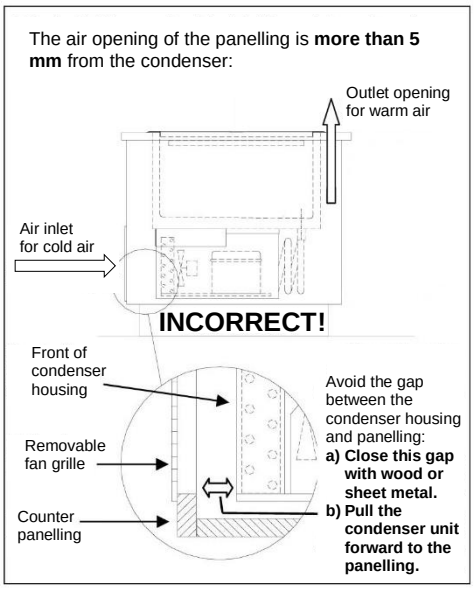

1.12 Air routing for self-cooled appliances

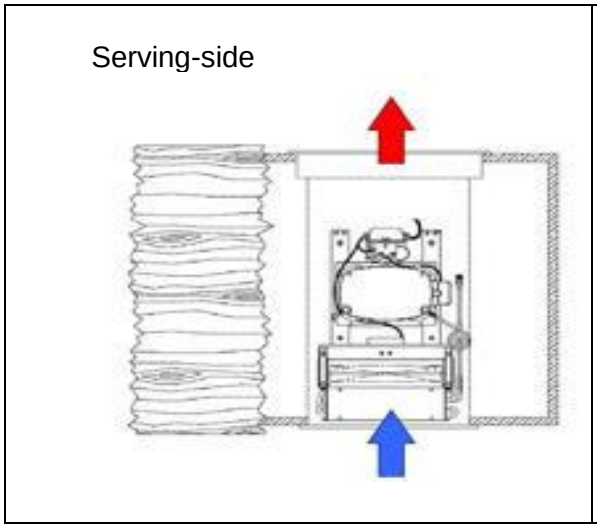

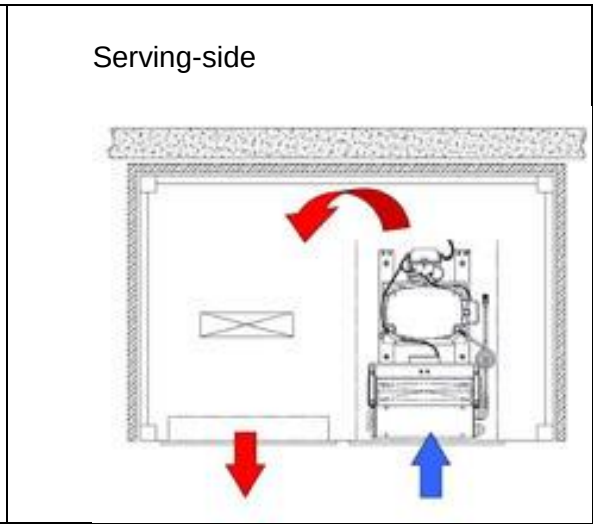

Variant 1
Air flow directly through the cooling unit, blown out in a straight line.

Variant 2
Air intake and warm air outlet channelled on the same side.

Optional: Additional fan

Whatever method is used, make sure that the incoming cold air reaches the interior through the condenser surface only and that no warm exhaust air is sucked in from the interior of the counter.

If the exhaust air is not routed out through an air duct, an additional exhaust fan can help transport the warm exhaust air out of the counter base unit. Especially with option 2, this provides better cooling of the refrigeration unit.

With aeration and ventilation on one side (variant 2), the distance between the ventilation openings should be as large as possible – at least 150 % flow diameter compared with the intake area – in order to prevent the warm exhaust air from being sucked in.

Make sure that the intake opening and the air outlet opening are large enough. The air flow must not be interrupted or obstructed; the warm exhaust air must be able to exit the unit room unhindered. The inlet and outlet openings must not be blocked or obstructed by the customer/operating company during operation.

A protective grid or shutter in the intake area is recommended to avoid damage to the fins of the condenser and the associated risk of injury to the user.

Use the solution that is most convenient for you.

The outlet opening (flow diameter) for the exhaust air should be at least 1.5 x the size of the condenser surface!

The available ventilation grids often reduce the actual cross-section and thus the intake and exhaust air openings. Shutters that are too angled can also increase air resistance, thus restricting air removal.

The cooling unit returns the thermal energy of the goods to the environment via the condenser. If this output is impaired, this leads to lower cooling capacity or, in the worst case, to a defective unit.

1.13 Drawings and technical data

For the device dimensions and technical data, please refer to your order confirmation.

1.14 Installation and mounting instructions for wall positioning

For the device dimensions and technical data, please refer to your order confirmation.

2 General information concerning the control unit

The ST 200 & 521 controller series are intended for general use in refrigeration systems.

2.1 Product description

The ST-BOX 200 is used for thermostatic temperature control of refrigeration systems. The controller can be supplied with 90...250 V AC and has four output relays that can be freely programmed to control a compressor, an evaporator fan, lighting or other necessary outputs. An output for DC fans is also available. It is operated either directly on the box or via a separate, connectable display.

The ST-BOX has a three-digit display, 3 operating keys and 7 LEDs that are also used to indicate the status of the relay outputs. The parameters are set at various operating levels, where access is increasingly difficult for reasons of security.

The controller is networked via an ST bus interface.

Sensor	Pt100, PTC, 4...20 mA
Housing dimensions	185 mm x 170 mm x 76 mm
Impermeability	Front IP20
Connection	WAGO connector plug

2.2 Control box circuit diagram

Ver. 1.11

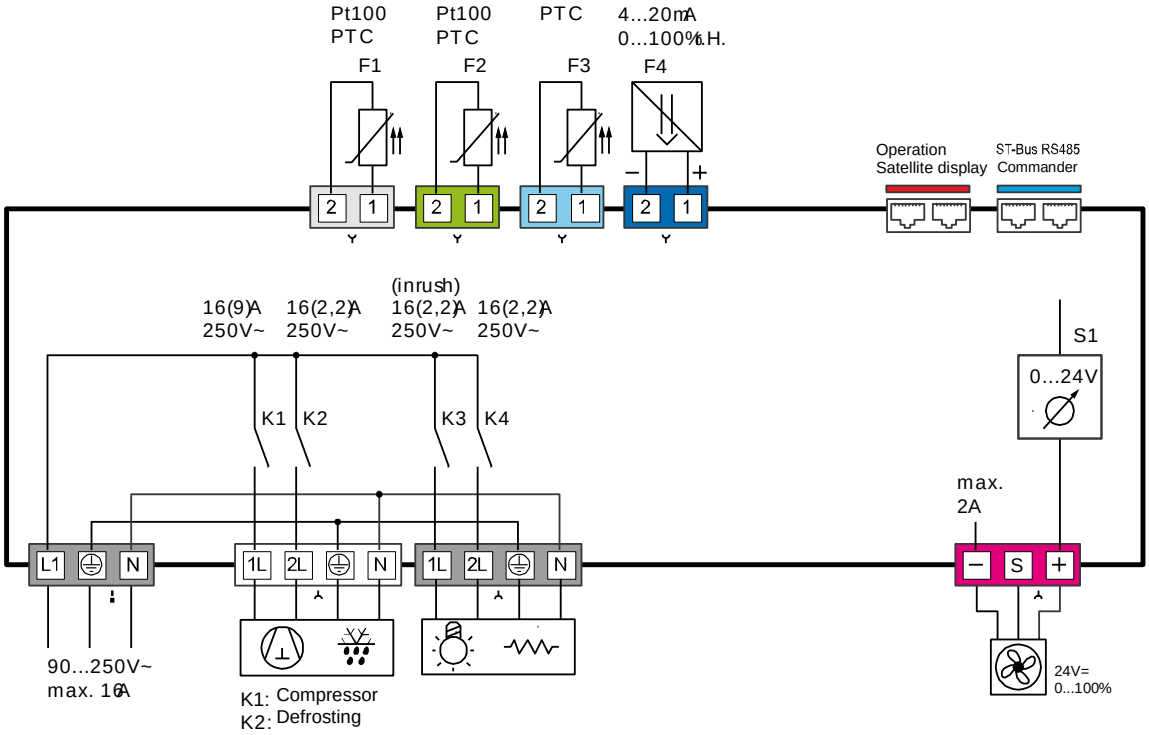

2.3 Operating panel (display)

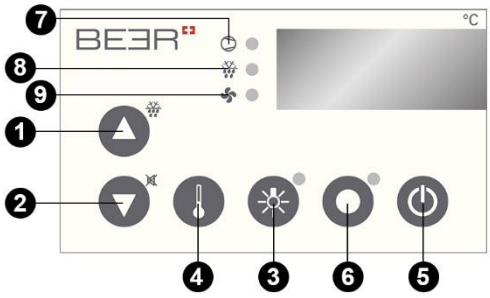

Key **1**	**UP key**	Press this key to increase the parameter value. Press the UP key for 3 seconds to start defrosting at any time.
Key **2**	**DOWN key**	Press this key to decrease the parameter value. An alarm can be acknowledged with the DOWN key.
Key **3**	**LIGHT key**	Off/On key for external lighting (if present).
Key **4**	**SET key**	While the SET key is pressed, the setpoint is displayed. The SET key is also used for parameter setting.
Key **5**	**ON/OFF key**	This key can be used to switch the cooling ON or OFF.
Key **6**	**Not used**	–
Lamp **7**	**Cooling mode**	
Lamp **8**	**Defrost mode**	
Lamp **9**	**Fan**	

Product description
The ST521 operating panel is equipped with an RJ45 connector plug and thus serves as an operating panel for a remote ST-BOX. It has six keys and a three-digit LED display. The operating panel is networked over the RJ45 interface.

Front dimensions	125 x 60 mm
Installation dimension	(WxHxD) 102.2 mm x 52.5 mm x min. 50 mm
Impermeability	Front IP65
Connection	RJ45

2.4 Wiring diagram

Ver. 1.11

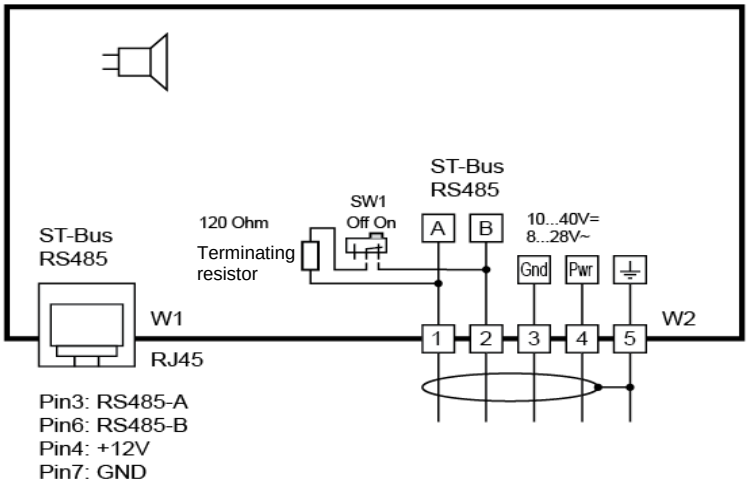

3 Parametrisation

Ver. 1.11

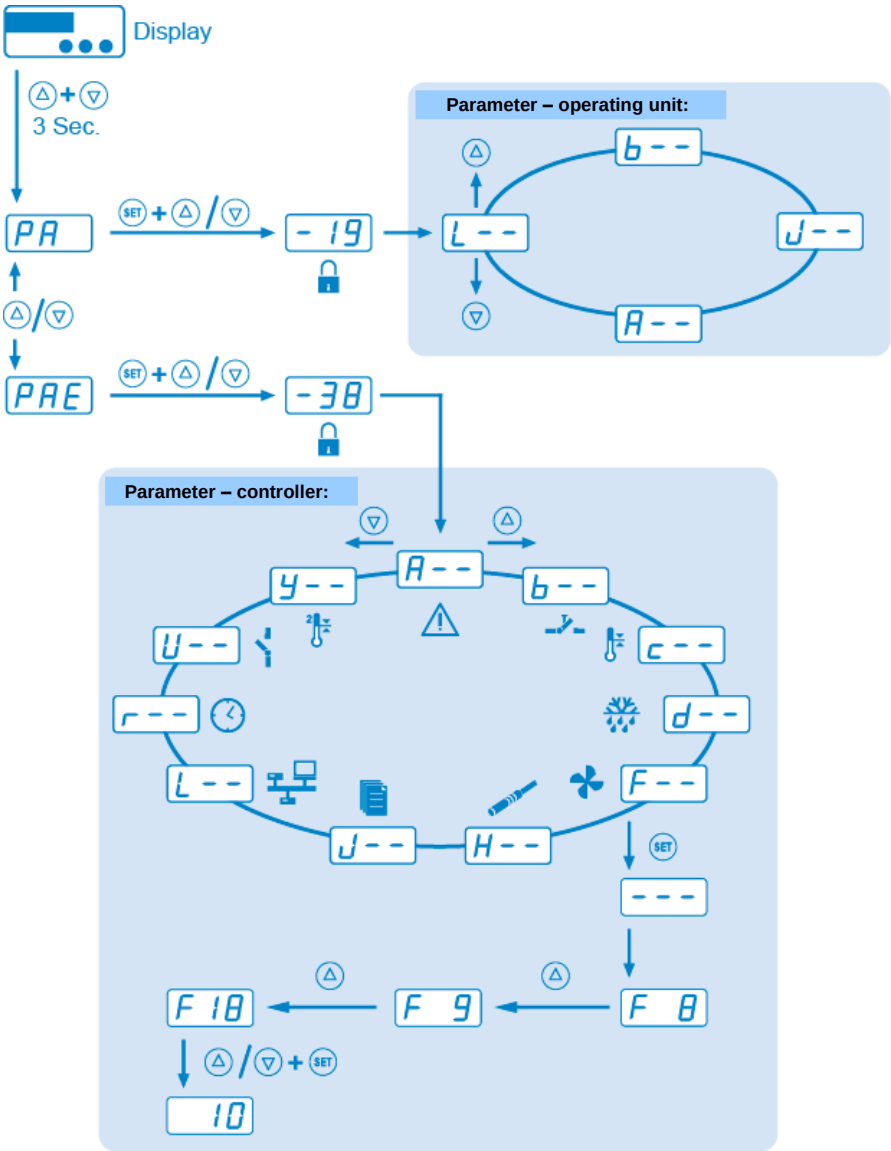

Parameter groups:

L - - Networking and display

b - - Key functions

J - - Predefined parameter sets

A - - Display

Beer Grill AG
Allmendstrasse 7
CH – 5612 Villmergen,
Switzerland
Tel. +41 56 618 7800
Fax +41 56 618 7849

Beer Grill GmbH
Körnerstrasse 14 a
D – 79539 Lörrach,
Germany
Tel. +49 71 61 659 876
Fax +49 71 61 659 879

info@beergrill.com
www.beergrill.com

3.1 Description of the operating keys

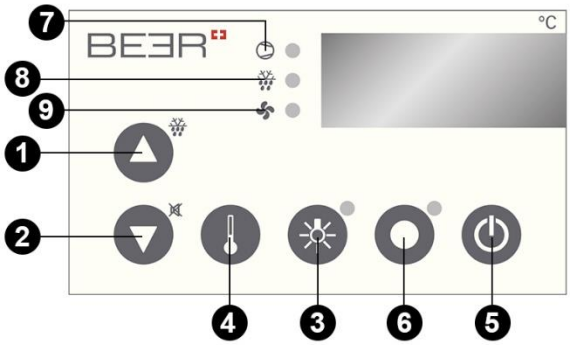

UP key (1)
Press this key (1) to increase the parameter or parameter value. A further function of the key can be defined using parameter **b1**. In addition to the value setting, the **UP** key performs other functions. Pressing the **UP** key for 3 seconds triggers unscheduled defrosting of the refrigeration system.

DOWN key (2)
Pressing this key (2) decreases the parameter or parameter value. A further function of the key can be defined using parameter **b2**. In addition to the value setting, the **DOWN** key performs other functions. In the event of an alarm with the associated triggered buzzer sound, pressing the **DOWN** key can be used to acknowledge the buzzer sound.

SET key (4)
Press the **SET** key (4) to display the setpoint.

Light key (3)
The key function (3) can be defined using parameter **b4**.

Option key (6)
The key function (6) can be defined using parameter **b5**.

ON/OFF key (5)
The key function (5) can be defined using parameter **b6**. Pressing the **ON/OFF** key during operation (for at least 3 seconds) switches the refrigeration controller off completely. The controller can be switched back on by pressing the **ON/OFF** key again.

The operating panel is always operated with the **UP**, **DOWN** and **SET** keys. The standard display shows the temperature of the cooling space (average actual temperature). Press the **SET** key (4) to switch the display to the cooling space temperature (setpoint temperature) required by the user.

The setpoint temperature can only be changed by simultaneously pressing the **SET** and **UP** or **SET** and **DOWN** keys. While pressing the keys, the changed setpoint can be read on the display. After changing the setpoint temperature and releasing the keys, the actual temperature reappears on the display. This is the default method of setting values.

3.2 Parametrisation information

Ver. 1.11

Information: This chapter is intended for technical personnel only.

The refrigeration controller is parametrised either at the factory or when a refrigeration system is commissioned by qualified personnel. Any incorrect or improper parameter setting can lead to malfunctions and thus damage to the chilled goods. The parameter setting can only be made with the help of one or more passwords. The following parameter list details all parameters of a complex refrigeration controller. However, it is important to bear in mind that the listed parameters only work in controller versions where the appropriate hardware (outputs, inputs, sensors and internal clock) is available.

The parametrisation can be carried out at any time. The control is not interrupted by the parametrisation, but can directly influence it. If no key is pressed for 2 minutes, the process is aborted and the actual value displayed again.

To enter the parametrisation process, press the **UP** and **DOWN** keys simultaneously. After approx. 3 seconds the code word **PA** appears on the display. Press the **UP** or **DOWN** key to switch between the code words **PA** and **PAE**.

All other settings or value defaults in the parameter level are made using the general method of value setting, i.e. by simultaneously pressing the **SET**, **UP** or **DOWN** keys.

PA input for the display password

Selecting the code word **PA** provides the option of setting a password required for parametrisation. After entering the password **-19**, the display shows the name of the first parameter group of the operating panel, **L--, b--, J--, A--**. It is now possible to select a parameter very quickly using the **UP** and **DOWN** keys.

PAE input for the control system password on the external control panel

Selecting the code word **PAE** provides the option of setting a password required for parametrisation. After entering the password **-38**, the display shows the name of the first parameter group of the connected controller, **A--** and others. It is now possible to select one of the parameter groups very quickly using the **UP** and **DOWN** keys.

Important information:

The same parameters or parameter groups can occur for **PA** (internal, display) and **PAE** (external, controller).

After selecting a parameter group, it is normally sufficient to press the **SET** key (**---** appears on the display) and then release the key. The first parameter of the parameter group then appears (e.g. in parameter group **A--**, parameter **A0**).

L-- Networking and display

Parameter	Functional description	Setting range	Factory values			Customer values
			Arctis/ Duplex	Vulcano	Cold Rack/ Showcases	
L0	ST bus, own address, identical to the **Adr** setting.	1...250	80	80	80	
L1	8	1...255	2	2	2	
L2	Temperature scale.	0: Celsius 1: Fahrenheit	0	0	0	
L3	Display mode for actual value.	0: Integer 1: Resolution 0.5 K 2: Resolution 0.1 K	2	2	2	
L4	Actual value, parameter address.	0...255	0	0	0	
L4b	Actual value 2, parameter address.	0...255	2	2	2	
L5	Request cycle for measured value.	1...99.9 s	1.0 s	1.0 s	1.0 s	
L6	Own software version.					
L7	Display during standby.	0: OFF 1: OFF 2: Right decimal point 3: Right decimal point flashing	0	0	0	
L8	Key lock function.	0: No lock 1: Setpoint displayed, cannot be adjusted 2: Setpoint not displayed 3: **PA** and **PAE** levels read only 4: **PA** level read only, **PAE** level not displayed 5. Function keys deactivated	0	0	0	
L9	Read/display status.	0: Read and display status 1: No status, display shows measured value	0	0	0	
L13	Setpoint offset or Setpoint 1.	0: Inactive 1: Setpoint **c1**	1	1	1	
L15	Behaviour of function keys with standby/controller off.	0: Function keys are deactivated 1: Function keys active	0	0	0	
L16	Setpoint offset or Setpoint 2 (key assignment with **b1 …b10** setting 18…21).	0: Inactive 1: Setpoint **(c1)** 2: Setpoint Set2 **(c3)** 3: Setpoint of 2nd control loop **(Y1)** 4: Humidity setpoint **(c31)** 5: Humidity setpoint Set2 **(c33)** 6: Triac setpoint **(U10)**	3	3	3	
L30	Display mode for actual value (display 2 if present).	0: Integer 1: Resolution 0.5 K 2: Resolution 0.1 K	2	2	2	
L31	Actual value, parameter address (display 2 if present).	0...255	18	18	18	
PA	Level selection password for internal level (satellite display).	- 99...999	- 19	- 19	- 19	
PAE	Level selection password for external access (levels in the connected controller).	- 99...999	- 38	- 38	- 38	
L99	Password for access to parameter list **L--**	- 99...999	0	0	0	

* Parameters **L0, L1, PA** and **PAE** can only be viewed and set via the ST bus.

b-- Key functions

Parameter	Functional description	Setting range	Factory values			Customer values
			Arctis/ Duplex	Vulcano	Cold Rack/ Showcases	
b1	Key 1 function	0: No function 1: Controller on/standby 2: Relay function A (light 1) 3: Relay function B (light 2) 4: Relay function C 5: Relay function D 6: Relay function E 7: Relay function F 8: Relay function G (reserved) 9: Set1 on 10: Set2 on 11: "Superfrost" on/off 12: "Humidity" on/off 13: Control loop 1 on/off 14: Control loop 2 on/off 15: Defrost request 16: Acknowledgement 17: Display 2nd actual value (→**L1b**) 18: Set for 2nd setpoint (→**L16**) + Humidity function (same as 12) after expiry b 19: Set for 2nd setpoint (→**L16**) + control loop 2 on/off 20: Set for 2nd setpoint (→**L16**) + C function 21: Set for 2nd setpoint (→**L16**), with no additional function 22: Set for time/date	15	15	15	
b2	Key 2 function	See **b1**	17	17	17	
b3	Key 3 function	See **b1**	0	0	0	
b4	Key 4 function	See **b1**	0	0	0	
b5	Key 5 function	See **b1**	0	0	0	
b6	Key 6 function	See **b1**	1	1	1	
b7	Key 7 function	See **b1**	0	0	0	
b8	Key 8 function	See **b1**	0	0	0	
b9	Key 9 function	See **b1**	0	0	0	
b10	Key 10 function	See **b1**	0	0	0	
b21	Key 1 delay	0.2…5.0 s	2.0	2.0	2.0	
b22	Key 2 delay	0.2…5.0 s	2.0	2.0	2.0	
b23	Key 3 delay	0.2…5.0 s	5.0	5.0	5.0	
b24	Key 4 delay	0.2…5.0 s	0.5	0.5	0.5	
b25	Key 5 delay	0.2…5.0 s	0.5	0.5	0.5	
b26	Key 6 delay	0.2…5.0 s	3.0	3.0	3.0	
b27	Key 7 delay	0.2…5.0 s	5.0	5.0	5.0	
b28	Key 8 delay	0.2…5.0 s	5.0	5.0	5.0	
b29	Key 9 delay	0.2…5.0 s	5.0	5.0	5.0	
b30	Key 10 delay	0.2…5.0 s	5.0	5.0	5.0	
b99	Password for access to parameter list **b--**	- 99...999	0	0	0	

Beer Grill AG
Allmendstrasse 7
CH – 5612 Villmergen, Switzerland
Tel. +41 56 618 7800
Fax +41 56 618 7849

Beer Grill GmbH
Körnerstrasse 14 a
D – 79539 Lörrach, Germany
Tel. +49 71 61 659 876
Fax +49 71 61 659 879

info@beergrill.com
www.beergrill.com

J-- Predefined parameter sets

Parameter	Functional description	Setting range	Factory values			Customer values
			Arctis/ Duplex	Vulcano	Cold Rack/ Showcases	
J1	Parameter set.	0 ... 1	0	0	0	
J99	Password for parameter level **J--**	- 99 ... 999	0	0	0	

Attention:
Any change to the parameter set changes all parameter setting!

A-- Function

Parameter	Functional description	Setting range	Factory values			Customer values
			Arctis/ Duplex	Vulcano	Cold Rack/ Showcases	
A1	Dim first display.	5…100	100	100	100	
A2	Dim second display (if present).	5…100	100	100	100	
A3	Dim LEDs.	5…100	50	50	50	
A4	Type of controller connected.	0: Standard 112 (→**Adr Con PA PAE**) 1: ST-Box (→**PA PAE**)	1	1	1	
A5	Restrict access to **USr** level.	0: All levels free 1: Only **USr** level accessible	0	0	0	
A99	Password for access to parameter list **P--**	- 99...999	- 19	- 19	- 19	

Parameter description:

Ver. 1.11

L0: ST BUS, own address
Each bus device is given a bus address that must be unique.

L1: ST BUS, address of the remote station
Address of the remote station that provides a measured value.

L2: Temperature scale
If the value of the data transfer is a temperature, it is converted to the unit set here for the display.

L3: Actual value display mode
The measured values sent from the controller to the satellite always have the highest resolution, but the satellite display can round the measured values to half or whole numbers if required. All parameter settings and setpoints are displayed with a resolution of 0.1 K.

L4: Parameter address of the measured value

L4b: Parameter address of measured value 2
The number of measured values the remote station addressed via **L1** makes available on the ST bus is specified in the respective data sheet. The measured values are arranged in a list and can be requested via an address within this list.

0	Display	11	Max. temperature
1	Cooling space temperature	12	Circuit 2 temperature
2	Evaporator temperature	13	Circuit 2 setpoint
3	Evaporator fan variable	14	Time
4	Cooling space setpoint	15	Sensor F1 direct
5	Condenser temperature	16	Sensor F2 direct
6	Condenser fan proportional result	17	Sensor F3 direct
7	Condenser fan variable	18	Sensor F4 direct
8	Condenser fan setpoint	19	Sensor F5 direct
9	Display via sample bottle		
10	Min. temperature		

L5: Request cycle
The measured values are requested periodically. The display is updated at the same rate.

L6: Software version

L7: Display during standby
The current status of the remote station is queried cyclically with the setting **L9** = 0. The setting in **L7** can be used to specify how the "OFF" state of the remote station is displayed. If **L9** = 1, the setting in **L7** is ignored.

L8: Key lock function
This parameter is used to set whether the setpoint, own parameter or external parameter may be displayed and/or adjusted via the keys. In the "0" setting, everything is permitted; in the "4" setting, all parametrisation is disabled. If **L8** = 5, any available function keys are also deactivated.

L8	Description
0	No key lock, setpoint and parameters are visible but can be adjusted.
1	No key lock, the setpoint can be displayed but not adjusted, the parameters of levels **PA** and **PAE** are freely accessible and can be adjusted.
2	SET key for setpoint is disabled, i.e. the setpoint cannot be displayed or adjusted. Parameter levels **PA** and **PAE** are freely accessible and can be adjusted.
3	As 2, but the parameters can only be displayed, not adjusted.
4	As 2, but only local level "**PA**" is visible and only "**L8**" can be adjusted.
5	As 4, but all function keys are locked (e.g. standby).

L9: Read/evaluate status
If the setting = 1, the current status of the remote station is not read. The measured value is permanently displayed. If the setting = 0, the status is read and evaluated.

L13: Setpoint offset or setpoint 1
This parameter is used to select the setpoint that can be displayed and adjusted by pressing the SET key. The "0" setting only makes sense for control systems with bus version < 4.0.

L15: Behaviour of the function keys with standby/controller off
This parameter determines if the function keys are active while the controller is in standby mode.

L16: Setpoint offset or setpoint 2
This parameter is used to select setpoint 2 that can be displayed and adjusted with another SET key. The "0" setting only makes sense for control systems with bus version < 4.0.

L30: Actual value display mode for second display (if present), see L3.

L31: Measured value parameter address for second display (if present), see L4.

L99: Password for access to parameter list **L--**
The password can be assigned individually.

ATTENTION !!!: If the user forgets the password, access to the parameter list is only possible with a master password.

b1 …. b10 Function of keys 1 … 10
These parameters can be used to trigger predefined functions by pressing a key. The functions are switched on and off each time the key is pressed. Only functions 9, 10, 15 and 16 switch the function on, but not off. Whether a function is executed or not depends on which controller is connected. The corresponding LED is then switched off again accordingly by the controller. Parameters **b21 … b30** indicate how long the key must be pressed in order to execute the function.

b21 … b30 Delay for keys 1 … 10
These parameters specify how long the key must be pressed for a particular function to be executed.

A1: Display, dim upper display

A2: Display, dim lower display

A3: Display, dim LEDs
These parameters can be used to adjust the intensity (brightness) of the displays present or LEDs. These parameters are only visible and adjustable via the ST bus.

A4: Type of controller connected

A5: Restrict access to **USr** level
If **A5** = 1 is set, the level selection is restricted to **USr**. A branch is made directly to the level of the connected controller. Since the parameter can no longer be accessed even then, it can only be reset if ST bus communication is interrupted and the display shows "F90".

3.3 Status displays and error messages

Ver. 1.11

Message	Cause	Measure
Decimal point	Assigned controller is switched off.	
F90	Data transmission error, controller not found.	Check the interface cabling. Check the address. **PAE**→ **L--**→ **L0** must be identical to **L1**. The correct ST BUS address must always be set on the display first via **L1**, as the controller can no longer be accessed if this error message is shown. The controller may also be de-energised.
F9c	Another appliance has the same address as this satellite display.	Change the address, first disconnect the ST bus (pin 1). (For procedure, see **F90**).
CrC	Internal flash error display.	Repair the display.
EP	Error in the parameter memory.	Check all parameters.

3.4 Technical data for display:

Ver. 1.11

Displays	Three-digit LED display, 13 mm high, pure white Five LEDs, diameter 3 mm, white, to indicate status	
Power supply	12 V =, provided by the controller	
Connections	RJ45 for CAT5 cable (4 x twisted pair) **ATTENTION:** Do not use for ETHERNET!	
Environmental conditions	Storage temperature Operating temperature Relative humidity	-20...+ 70 °C 0...55 °C max. 75 % r.H., no condensation
Degree of protection	IP65 from the front, IP00 from behind	
Protection class	Protection class III (appliance carries low voltage only)	
Standards	CE Low Voltage Directive 73/23/EEC EN 60335-1:2009 Safety of household and similar electrical appliances EN 60730-1:2012 Automatic electrical controls for household and similar use EN 61010-1:2002 Safety requirements for electrical equipment for measurement, control and laboratory use CE EMC Directive 2004/108/EC, Severity 3	
Interface	ST bus for connection to a controller ST bus with RS485 interface driver, not electrically isolated, 56 kbaud, maximum cable length 1000 m, bus termination switchable	
Installation details	The appliance is designed for installation in a control panel External dimensions Control panel cutout Installation depth:	 125 x 60 mm 102.2 x 52.5 mm, see drawing 22 mm (excluding mating connector)

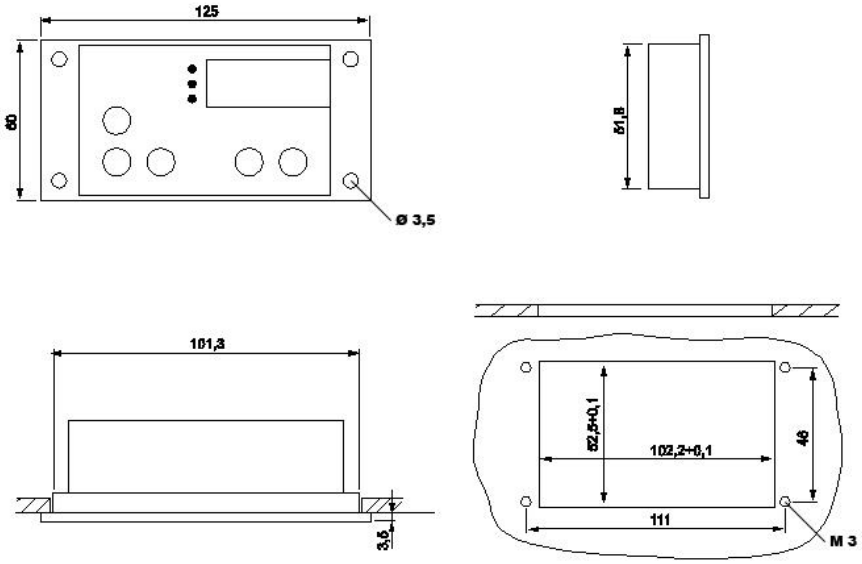

4 Technical data of the control system

4.1 ST-Box parameter groups

	A - -	**Alarms**
*	b - -	**Keys and switch inputs**
	c - -	**Control loop 1**
	d - -	**Defrosting control loop 1**
	F - -	**Fan control loop 1**
	H - -	**Temperature probes and sensors**
*	J - -	**Predefined parameter sets**
*	L - -	**Networking and display**
*	r - -	**Seven-day timer**
*	U - -	**Relay contacts and lamps**
*	Y - -	**Control loop 2**

* Level protected at the factory by password **-19**

4.2 Most important variable parameter values, basic parameters

c-- Control loop 1

Parameter	Functional description	Setting range	Factory values			Customer values
			Arctis/ Duplex	Vulcano	Cold Rack/ Showcases	
C5	Control loop: Hysteresis.	0.1...15.0 °C	1.5	0.5	1.5	

d-- Defrosting control loop 1

Parameter	Functional description	Setting range	Factory values			Customer values
			Arctis/ Duplex	Vulcano	Cold Rack/ Showcases	
d1	Defrosting interval.	0: No automatic defrosting 1...99 h	3	3	3	
d2	Type of defrosting.	0: No defrosting 1: Compressor off only (recirculation) 2: Electric 3: With hot gas	1	1	1	
d3	Stop at defrost temperature.	0 ... + 30.0 °C	10.0	10.0	10.0	
d4	Defrost time limitation.	1...99 min	30	30	30	

F-- Fan control loop 1

Parameter	Functional description	Setting range	Factory values			Customer values
			Arctis/ Duplex	Vulcano	Cold Rack/ Showcases	
F8	Fan speed standard operation, Set1.	0 ... 98 %	55.0 36.0	35.0	75.0	
F9	Defrost fan speed, Set1.	0 ... 98 %	98.0	98.0	98.0	

H-- Temperature probes and sensors

Parameter	Functional description	Setting range	Factory values			Customer values
			Arctis/ Duplex	Vulcano	Cold Rack/ Showcases	
H11	Sensor F1 actual value.	Measured value, not adjustable				
H12	Sensor F1 calibration (actual value correction).	- 20...+ 20.0 °C	0.0	0.0	0.0	
H21	Sensor F2 actual value.	Measured value, not adjustable				

L-- Networking and display (password-protected)

Parameter	Functional description	Setting range	Factory values			Customer values
			Arctis/ Duplex	Vulcano	Cold Rack/ Showcases	
L2	Temperature scale.	0: Celsius 1: Fahrenheit	0	0	0	
L3	Display mode for actual value.	0: Integer 1: Resolution 0.5 K 2: Resolution 0.1 K	2	2	2	
L4	Measured value (display) parameter address.	0...255	0	0	0	
L7	Display during standby.	0: OFF 1: OFF 2: Right decimal point 3: Right decimal point flashing	0	0	0	

A-- Alarms

Parameter	Functional description	Setting range	Factory values			Customer values
			Arctis/ Duplex	Vulcano	Cold Rack/ Showcases	
A0	Assignment of alarm sensor. Detailed description of the sensors in parameters H11 to H53.	0: None 1: Sensor F1 2: Sensor F2 3: Sensor F3 4: Sensor F4 5: Weighted average of F1 and F2	1	1	1	
A1	Upper limit value.	+ 0.1...+ 99.0 °C (0.0: Inactive)	10.0	10.0	10.0	
A2	Lower limit value.	- 99.0...- 0.1 °C (0.0: Inactive)	- 10	- 10	- 10	
A3	Switching direction of alarm relay.	0: With alarm on (normal) 1: With alarm off (inverse)	1	1	1	
A4	Switching hysteresis for alarm.	0.1...15.0 °C	2.0	2.0	2.0	
A10	Alarm suppression time after temperature alarm.	0...240 min	10	10	10	
A11	Alarm suppression time after defrosting.	0...240 min	15	15	15	
A12	Alarm suppression time after control on or change of setpoint or alarm limits.	0...300 min	180	180	180	
A13	Alarm suppression time for door open.	0: No alarm 1 ... 600 s	180	180	180	
A14	Behaviour when the temperature alarm disappears automatically.	0: Without buzzer, automatic deletion 1: With buzzer, automatic deletion 2: Without buzzer, with acknowledgement 3: With buzzer, with acknowledgement	1	1	1	
A15	Buzzer and/or display function upon alarm (for temperature alarm, see A14).	0: No display, no buzzer 1: Flashing display only 2: Only buzzer active 3: Display flashes, buzzer active 4: As 2, can be acknowledged 5: As 3, buzzer can be acknowledged 6: As 5, recurring after A16	5	5	5	

Parameter	Functional description	Setting range	Factory values			Customer values
			Arctis/ Duplex	Vulcano	Cold Rack/ Showcases	
A16	Recurring buzzer after acknowledgement.	1 ... 120 min	30	30	30	
A17	Reset MIN/MAX memory.	0: - 1: Reset MAX memory 2: Reset MIN memory 3: Reset MAX and MIN memory	0	0	0	
A18	Display of the current MAX memory.	Measured value, not adjustable				
A19	Display of the current MIN memory.	Measured value, not adjustable				
A20	High-pressure switch function Triggers until permanent alarm.	0: No permanent alarm 1..10: Triggers every 15 min	0	0	0	
A25	Low-pressure switch function. Delay until permanent alarm.	0: No permanent alarm 1...300 s	0	0	0	
A99	Password for parameter level A--	- 99 ... 999	0	0	0	

b-- Keys and switch inputs (password-protected)

Parameter	Functional description	Setting range	Factory values			Customer values
			Arctis/ Duplex	Vulcano	Cold Rack/ Showcases	
b11	Function of external switching input E1.	0: No function 1: Controller on/standby 2: High-pressure alarm (see A20 3: Low-pressure alarm (see A25 4: Door contact (light on, fan off, see also A13 5: Relay function A (light 1), not active during standby 6: Relay function A (light 1), independent of standby 7: Relay function B (light 2), not active during standby 8: Relay function B (light 2), independent of standby 9: Relay function C (window heating), not active during standby 10: Relay function C (window heating), independent of standby 11: Relay function D (door frame heating), not active during standby 12: Relay function D (door frame heating), independent of standby 13: Relay function E (knife wiper), not active during standby 14: Relay function E (knife wiper), independent of standby 15: Relay function F, not active during standby 16: Relay function F, independent Standby 17: Set1/Set2 changeover 18: Day/Night changeover 19: "Superfrost" on/off (see also c21 …. c23) 20: Evaporator fan permanently on 21: Defrost request, circuit 1 22: Defrost request, circuit 2 23: Control loop 1 on/off 24: Control loop 2 on/off 25: As 17, remember status after power failure 26: As 6, remember status after power failure 27: As 8, remember status after power failure 28: External alarm	0	0	0	

Parameter	Functional description	Setting range	Factory values			Customer values
			Arctis/ Duplex	Vulcano	Cold Rack/ Showcases	
b12	Input E1 inverse/non-inverse.	0: Normal 1: Inverse	0	0	0	
b13	Ext. function Switching input E2.	See b11	0	0	0	
b14	Input E2 inverse/non-inverse.	See b12	0	0	0	
b15	Ext. function Switching input E3.	See b11	0	0	0	
b16	Input E3 inverse/non-inverse.	See b12	0	0	0	
b17	Ext. function Switching input E4.	See b11	0	0	0	
b18	Input E4 inverse/non-inverse.	See b12	0	0	0	
b99	Password for level b--	-99 ... 999	- 19	- 19	- 19	

c-- Control loop 1

Parameter	Functional description	Setting range	Factory values			Customer values
			Arctis/ Duplex	Vulcano	Cold Rack/ Showcases	
c0	Assignment of cooling space sensor. Detailed description of the sensors in parameters H11 to H53.	0: None 1: Sensor F1 2: Sensor F2 3: Sensor F3 4: Sensor F4 5: Weighted average of F1 and F2	1	1	1	
c1	Control loop: Setpoint for Set1.	c8.....c7	0.0	0.0	0.0	
c2	Control loop: Night switching setpoint (relative to actual setpoint c1 / c33.	- 20 ... + 20.0 °C	5.0	5.0	5.0	
c3	Control loop: Setpoint for Set2.	c8.....c7	2.0	2.0	2.0	
c4	Switching direction.	0: Heating 1: Cooling	1	1	1	
c5	Control loop: Hysteresis.	0.1...15.0 °C	1.5	1.5	1.5	
c6	Control loop: Hysteresis mode.	0: Symmetrical 1: One-sided	1	1	1	
c7	Upper setpoint limit.	c8 99 °C	15.0	15.0	15.0	
c8	Lower setpoint limit.	- 99 °C... c7	2.0	- 1.5	2.0	
c10	Start protection after compressor start.	0 ... 900 s	300	300	300	
c11	Start protection after compressor stop.	0 ... 900 s	120	120	120	
c12	Compressor start protection after mains on.	0 ... 60 min	0	0	0	
c15	Duty cycle in emergency operation.	0 ... 100 %	50	50	50	
c16	Cycle time in emergency operation.	5 ... 60 min	10	10	10	
c20	Sensor assignment for “Superfrost" (also core or product temperature) Detailed description of the sensors in parameters H11 to H53.	0: None 1: Sensor F1 2: Sensor F2 3: Sensor F3 4: Sensor F4 5: Weighted average of F1 and F2	1	1	1	
c21	"Superfrost": Time limit ("Shock freezing","Max. cooling capacity").	1 ... 36 h	10	10	10	

Parameter	Functional description	Setting range	Factory values			Customer values
			Arctis/ Duplex	Vulcano	Cold Rack/ Showcases	
c22	"Superfrost": Temperature limit ("Shock freezing","Max. cooling capacity").	- 40 ... 0 °C	0.0	0.0	0.0	
c23	"Superfrost": Automatic switch-off ("Shock freezing","Max. cooling capacity").	0: None, manual only 1: According to time 2: According to time or temperature	2	2	2	
c30	Humidity sensor assignment. Detailed description of the sensors in parameters H11 to H47.	0: None 1: Sensor F1 2: Sensor F2 3: Sensor F3 4: Sensor F4 5: Weighted average of F1 and F2	0	0	0	
c31	Humidity setpoint.	0 … 100 % rH	50 %	50 %	50 %	
c32	Humidity night switching (relative to c31.	- 20 … +20 %	0	0	0	
c33	Humidity setpoint for Set2.	0 … 100 % rH	50 %	50 %	50 %	
c34	Humidity mode.	0: Off 1: Evaporator fan on (continuous operation) 2: Humidification 3: Dehumidification with reheating	1	1	1	
c35	Humidity hysteresis.	0.1 % … 15.0 %	5.0 %	5.0 %	5.0 %	
c36	Humidity hysteresis mode.	0: Symmetrical 1: One-sided	1	1	1	
c37	Setpoint offset for reheating during dehumidification (relative to cooling space setpoint c1/c2/c3).	- 15.0 … 0.0 K	- 0.5	- 0.5	- 0.5	
c38	Hysteresis for c37 (one-sided, below).	0.1 … 10.0 K	1.0 K	1.0 K	1.0 K	
c39	Setpoint limitation c31/c33 top.	c40 … 100 %	100 %	100 %	100 %	
c40	Setpoint limitation c31/c33 bottom.	0.0 % … c39	0.0 %	0.0 %	0.0 %	
c99	Password for parameter level c--	-99 ... 999	0	0	0	

d-- Defrosting control loop 1

Parameter	Functional description	Setting range	Factory values			Customer values
			Arctis/ Duplex	Vulcano	Cold Rack/ Showcases	
d0	Assignment of evaporator sensor (defrost sensor). Detailed description of the sensors in parameters H11 to H47.	0: None 1: Sensor F1 2: Sensor F2 3: Sensor F3 4: Sensor F4 5: Weighted average of F1 and F2	2	2	2	
d1	Defrosting interval.	0: No automatic defrosting 1...99 h	3	3	3	
d2	Type of defrosting.	0: No defrosting 1: Compressor off only (recirculation) 2: Electric 3: With hot gas	1	1	1	
d3	Stop at defrost temperature.	0 ... + 30.0 °C	10.0	10.0	10.0	
d4	Defrost time limitation.	1...99 min	30	30	30	

Parameter	Functional description	Setting range	Factory values			Customer values
			Arctis/ Duplex	Vulcano	Cold Rack/ Showcases	
d7	Temperature difference to the cooling space setpoint with previous cooling down.	- 15 °C ... 0.0 °C	0.0	0.0	0.0	
d8	Time limit with previous cooling down.	1 ... 180 min	10	10	10	
d9	Delay time for defrost start after compressor off d2 = 2	0 ... 900 s	60	60	60	
d10	Drip off time .	0 ... 15 min	1	1	1	
d11	Drip tray heating run-on time.	0 ... 60 min	10	10	10	
d20	Display forced release after defrosting.	0 ... 60 min (0 = no forced release)	5	5	5	
d99	Password for parameter level d--	- 99 ... 999	0	0	0	

F-- Fan control loop 1

Parameter	Functional description	Setting range	Factory values			Customer values
			Arctis/ Duplex	Vulcano	Cold Rack/ Showcases	
F8	Fan speed standard operation, Set1.	0 ... 98 %	55.0 36.0	35.0	70.0	
F9	Defrost fan speed, Set1.	0 ... 98 %	98.0	98.0	98.0	
F10	Control mode fan speed, Set2.	0 ... 98 %	80.0	80.0	80.0	
F11	Defrost fan speed, Set2.	0 ... 98 %	98.0	98.0	98.0	
F12	Start boost time.	0 ... 60 s	5	5	5	
F13	Minimum speed (output variable with result = 0).	0 ... 98 %	40.0	40.0	40.0	
F15	Evaporator fan. Normal operation fan mode. Remark: Control setpoint with F15 >4 is c1 or c3	0:Off 1:Continuously running 2:As 1, with drip interruption 3:With compressor on 4:Temperature-controlled, evaporator sensor only 5:Temperature-controlled, difference of cooling space to evaporator sensor	1	1	1	
F16	Evaporator fan, defrost fan mode.	0: Off 1: On	1	1	1	
F17	Evaporator fan, delay after compressor start.	0 ... 600 s	0	0	0	
F18	Evaporator fan, delay after defrosting.	0 ... 600 s	0	0	0	
F19	Evaporator fan, drip interruption time with F15 = 2	0 ... 600 s	0	0	0	
F20	Evaporator fan, control offset with F15 = 4 or 5	- 15.0 ... + 15.0 °C	0.0	0.0	0.0	
F21	Evaporator fan, control hysteresis with F15 = 4 or 5	0.1 ... 15.0 °C	2.0	2.0	2.0	
F50	Condenser sensor assignment. Detailed description of the sensors in parameters H11 to H53	0:None 1:Sensor F1 2:Sensor F2 3:Sensor F3 4:Sensor F4 5:Weighted average of F1 and F2	0	0	0	
F51	Condenser fan setpoint.	- 55...+ 150 °C	60.0	60.0	60.0	

Parameter	Functional description	Setting range	Factory values			Customer values
			Arctis/ Duplex	Vulcano	Cold Rack/ Showcases	
F54	Condenser fan switching hysteresis.	0.1...15.0 °C	10.0	10.0	10.0	
F58	Condenser fan, delay after compressor start.	0...300 s	60.0	60.0	60.0	
F59	Condenser fan, delay after compressor stop (run-on).	0...600 s	300	300	300	
F65	Condenser fan function.	0: Always off 1: Always on 2: On when compressor on 3: According to setpoint F51 4: As 3, as P-controller	2	2	2	
F66	P-controller proportional range with F65 = 4	0.1 ... 30.0 °C	10.0	10.0	10.0	
F67	Minimum speed (output PWM with result = 0).	0 ... 100 %	50.0	50.0	50.0	
F68	Condenser fan start boost.	0 ... 60 s	10	10	10	
F99	Password for parameter level F--	- 99 ... 999	0	0	0	

H-- Temperature probes and sensors

Parameter	Functional description	Setting range	Factory values			Customer values
			Arctis/ Duplex	Vulcano	Cold Rack/ Showcases	
H1	Mains frequency.	0: 50 Hz 1: 60 Hz	0	0	0	
H11	Sensor F1 actual value.	Measured value, not adjustable				
H12	Sensor F1 calibration (actual value correction).	- 20...+ 20.0 °C	0.0	0	0	
H13	Sensor F1 weighting factor.	0.50...1.50	1.00	1.00	1.00	
H14	Sensor F1 sensor selection. Not all types are available depending on the hardware. In this case, the sensor is deactivated.	0: Not available 1: PTC (- 50…..+ 150 °C) 2: Pt100, 2-wire (- 100…+ 600 °C) 3: Pt100, 3-wire (- 100…+ 500 °C) 4: NTC (- 40……+ 40 °C) 5: Pt1000, 2-wire (- 100…+ 330 °C) 6: Pt1000, 3-wire (- 100…+ 300 °C) 7: 0-20 mA 8: 4-20 mA	1	1	1	
H15	Sensor F1 software filter.	1 .. 32	8	8	8	
H16	Display at 0/4 mA and sensor selection H14 = 7/8	- 99..+ 999	0.0	0.0	0.0	
H17	Display at 20 mA and sensor selection H14 = 7/8	- 99..+999	100	100	100	
H21	Sensor F2 actual value.	Measured value, not adjustable				
H22	Sensor F2 calibration (actual value correction).	- 20...+ 20.0 °C	0.0	0.0	0.0	
H23	Sensor F2 weighting factor.	0.50...1.50	1.00	1.00	1.00	
H24	Sensor F2 sensor selection.	See H14	1	1	1	
H25	Sensor F2 software filter.	1 .. 32	8	8	8	
H26	Display at 0/4 mA and sensor selection H24 = 7/8	- 99..+ 999	0.0	0.0	0.0	
H27	Display at 20 mA and sensor selection H24 = 7/8	- 99..+999	100	100	100	

Parameter	Functional description	Setting range	Factory values			Customer values
			Arctis/ Duplex	Vulcano	Cold Rack/ Showcases	
H31	Sensor F3 actual value.	Measured value, not adjustable				
H32	Sensor F3 calibration (actual value correction).	- 20...+ 20.0 °C	0.0	0.0	0.0	
H33	Sensor F3 weighting factor.	0.50...1.50	1.00	1.00	1.00	
H34	Sensor F3 sensor selection.	See H14	0	0	0	
H35	Sensor F3 software filter.	1 .. 32	8	8	8	
H36	Display at 0/4 mA and sensor selection H34 = 7/8	- 99..+ 999	0.0	0.0	0.0	
H37	Display at 20 mA and sensor selection H34 = 7/8	- 99..+ 999	100	100	100	
H41	Sensor F4 actual value.	Measured value, not adjustable				
H42	Sensor F4 calibration (actual value correction).	- 20...+ 20.0 °C	0.0	0.0	0.0	
H43	Sensor F4 weighting factor.	0.50...1.50	1.00	1.00	1.00	
H44	Sensor F4 sensor selection.	See H14	0	0	0	
H45	Sensor F4 software filter.	1 .. 32	8	8	8	
H46	Display at 0/4 mA and sensor selection H44 = 7/8	- 99..+ 999	0.0	0.0	0.0	
H47	Display at 20 mA and sensor selection H44 = 7/8	- 99..+ 999	100	100	100	
H51	Display of weighted average of F1+F2 H51 = (H53* H11 + (100- H53) * H21)/100					
H53	Weighting of sensor F1 for H51	0 ... 100 %	100	100	100	
H99	Password for parameter level H--	- 99 ... 999	0	0	0	

J-- Predefined parameter sets (password-protected)

Parameter	Functional description	Setting range	Factory values			Customer values
			Arctis/ Duplex	Vulcano	Cold Rack/ Showcases	
J1	Parameter set.	0 ... 6	0	0	0	
J98	Password for entering the level selection (if PA is displayed).	- 99 ... 999	- 19	- 19	- 19	- 19
J99	Password for parameter level J--	- 99 ... 999	- 19	- 19	- 19	- 19

Parameter J98 is only visible and adjustable via the ST bus. **Attention:** Any change to the parameter set changes **all** parameter settings!

L-- Networking and display (password-protected)

Parameter	Functional description	Setting range	Factory values			Customer values
			Arctis/ Duplex	Vulcano	Cold Rack/ Showcases	
L0	Own ST bus address of the box (corresponds to setting Adr).	0: Deactivated 1 ... 250	1	1	1	
L2	Temperature scale.	0: Celsius 1: Fahrenheit	0	0	0	
L3	Display mode for actual value.	0: Integer 1: Resolution 0.5 K 2: Resolution 0.1 K	2	2	2	
L4	Measured value (display) parameter address.	0...255	0	0	0	
L6	Software version.					
L7	Display during standby.	0: OFF 1: OFF 2: Right decimal point 3: Right decimal point flashing	0	0	0	
L40	ST bus enable screen for functions.	0 .. 255	251	251	251	
L41	ST bus enable screen for functions.	0 .. 255	255	255	255	
L42	Enable for deleting counter/run times.	0: No enable 1: Delete is enabled for 10 min (see A17, N98 and T98)	0	0	0	
L99	Password for parameter level L--	- 99 ... 999	- 19	- 19	- 19	

U-- Relay contacts and lamps (password-protected)

Parameter	Functional description	Setting range	Factory values			Customer values
			Arctis/ Duplex	Vulcano	Cold Rack/ Showcases	
U1	K1 relay function.	0: No function (off) 1: Compressor 2: Defrosting circuit 1 3: Evaporator fan 4: Condenser fan 5: Alarm 6: Control contact circuit 2 7: Defrosting circuit 2 8: Relay function A (light 1) 9: Relay function B (light 2) 10: Relay function C 11: Relay function D 12: Relay function E 13: Relay function F 14: Drip tray heating 15: Buzzer 16: On if controller active 17: On if control loop 1 is active 18: On if control loop 2 is active 19: On if Set 1 is active 20: On if Set 2 is active 21: On if day switching is active 22: On if night switching is active 23: On if Superfrost function active 24: Reheating during dehumidification 25: Humidification	1	1	1	

Parameter	Functional description	Setting range	Factory values			Customer values
			Arctis/ Duplex	Vulcano	Cold Rack/ Showcases	
U2	K2 relay function.	See U1	2	2	2	
U3	K3 relay function.	See U1	12	12	12	
U4	K4 relay function.	See U1	8	8	8	
U5	K5 relay function.	See U1	6	6	6	
U6	K6 relay function.	See U1	10	10	10	
U7	K7 relay function.	See U1	5	5	5	
U8	K8 relay function.	See U1	0	0	0	
U9	Triac output function.	See U1	0	0	0	
U10	Triac output power limitation.	0 ... 100 %	80.0	80.0	80.0	
U11	Upper limit for U10	U12 … 100 %	100	100	100	
U12	Lower limit for U10	0 % … U11	0.0	0.0	0.0	
U99	Password for parameter level U--	- 99 ... 999	- 19	- 19	- 19	

Y-- Control loop 2 (password-protected)

Parameter	Functional description	Setting range	Factory values			Customer values
			Arctis/ Duplex	Vulcano	Cold Rack/ Showcases	
Y0	Assignment of sensor for control loop 2. Detailed description of the sensors in parameters H11 to H53	0: None 1: Sensor F1 2: Sensor F2 3: Sensor F3 4: Sensor F4 5: Weighted average of F1 and F2	0	0	0	
Y1	2nd control loop: Setpoint.	Y8 ... Y7	10.0	10.0	10.0	
Y2	2nd control loop: Absolute or DeltaW setpoint.	0: Absolute 1: DeltaW	0	0	0	
Y4	2nd control loop: Switching direction.	0: Heating 1: Cooling	1	1	1	
Y5	2nd control loop: Hysteresis.	0.1...99.0 °C	2.0	2.0	2.0	
Y6	2nd control loop: Hysteresis mode.	0: Symmetrical 1: One-sided	1	1	1	
Y7	Upper setpoint limit.	Y8 ... + 999 °C	50.0	50.0	50.0	
Y8	Lower setpoint limit.	- 99 °C ... Y7	- 50	- 50	- 50	
Y9	Function in case of sensor error.	0: Contact off 1: Contact on	1	1	1	
Y10	Defrosting interval control loop 2.	0: No defrosting 1...99 h	0	0	0	
Y11	Defrost time limit thermostat 2.	1...99 min	30	30	30	
Y99	Password for parameter level Y--	- 99 ... 999	- 19	- 19	- 19	

N-level (counter)

Parameter can only be accessed via the ST bus.

Parameter	Function	Setting range	Standard			Customer values
			Arctis/ Duplex	Vulcano	Cold Rack/ Showcases	
N0	Switching cycles of relay K1 (lower 16 bits).	-				
N1	Switching cycles of relay K1 (upper 16 bits).	-				
N2	Switching cycles of relay K2 (lower 16 bits).	-				
N3	Switching cycles of relay K2 (upper 16 bits).	-				
N4	Switching cycles of relay K3 (lower 16 bits).	-				
N5	Switching cycles of relay K3 (upper 16 bits).	-				
N6	Switching cycles of relay K4 (lower 16 bits).	-				
N7	Switching cycles of relay K4 (upper 16 bits).	-				
N8	Switching cycles of relay K5 (lower 16 bits).	--				
N9	Switching cycles of relay K5 (upper 16 bits).					
N10	Switching cycles of relay K6 (lower 16 bits).	-				
N11	Switching cycles of relay K6 (upper 16 bits).	-				
N12	Switching cycles of relay K7 (lower 16 bits).	-				
N13	Switching cycles of relay K7 (upper 16 bits).	-				
N14	Switching cycles of relay K8 (lower 16 bits).	-				
N15	Switching cycles of relay K8 (upper 16 bits).	-				
N98	Reset counter.	0: - 1: Reset	0	0	0	
N99	Password for N-level.	- 99 … 999	0	0	0	

The number of switching cycles for K1, for example, is calculated as follows: **Number = 65536 * N1 + N0**.

Parameter N98 resets all relay switching cycle counters. It depends on the setting in parameter L42. The return value is automatically set back to 0.

T-level (operating times)

Parameter can only be accessed via the ST bus.

Parameter	Function	Setting range	Standard			Customer values
			Arctis/ Duplex	Vulcano	Cold Rack/ Showcases	
T10	Total operating time (lower 16 bits).	-				
T11	Total operating time (upper 16 bits).	-				
T12	Operating time since last reset (lower 16 bits).	-				
T13	Operating time since last reset (upper 16 bits).	-				
T14	"Compressor" on-time (lower 16 bits).	-				
T15	"Compressor" on-time (upper 16 bits).	-				
T16	"Defrost circuit 1" on-time (lower 16 bits).	-				
T17	"Defrost circuit 1" on-time (upper 16 bits).	-				
T18	"Evaporator fan" on-time (lower 16 bits).	-				
T19	"Evaporator fan" on-time (upper 16 bits).	-				
T20	"Condenser fan" on-time (lower 16 bits).	-				
T21	"Condenser fan" on-time (upper 16 bits).	-				
T22	"Thermostat 2" on-time (lower 16 bits).	-				
T23	"Thermostat 2" on-time (upper 16 bits).	-				
T24	"Defrost circuit 2" on-time (lower 16 bits).	-				
T25	"Defrost circuit 2" on-time (upper 16 bits).	-				
T26	"Drip tray heating" on-time (lower 16 bits).	-				
T27	"Drip tray heating" on-time (upper 16 bits).	-				
T28	Relay function A on-time (light 1, lower 16 bits).	-				
T29	Relay function A on-time (light 1, upper 16 bits).	-				
T30	Relay function B on-time (light 2, lower 16 bits).	-				
T31	Relay function B on-time (light 2, upper 16 bits).	-				
T32	Relay function C on-time (lower 16 bits).	-				
T33	Relay function C on-time (upper 16 bits).	-				
T34	Relay function D on-time (lower 16 bits).	-				
T35	Relay function D on-time (upper 16 bits).	-				
T36	Relay function E on-time (lower 16 bits).	-				
T37	Relay function E on-time (upper 16 bits).	--				
T38	Relay function F on-time (lower 16 bits).	-				
T39	Relay function F on-time (upper 16 bits).	-				
T98	Reset operating hours.	0: - 1: Reset	0	0	0	
T99	Password for T-level.	- 99 … 999	0	0	0	

The operating time is calculated as follows, for example: **Operating time (in min) = 65536 * T11 + T10.**

Parameter T98 resets all operating and running times (except T10 and T11). It depends on the setting in parameter L42. The return value is automatically set back to 0.

4.3 Status messages

Master password

All passwords can be changed by parametrisation. If the user forgets the password, it is still possible to parametrise the controller via a master password and, in particular, to check and/or change the forgotten password. This requires the following steps:

1. Switch off the power supply to the controller (disconnect from the mains or switch off the power supply unit).
2. Press the **UP**, **DOWN** and **SET** keys simultaneously and switch on the power supply again.
3. A ("challenge") number now appears on the display for approx. 5 s. Do not disconnect the controller from the power supply now because this would invalidate the number. Use this number to call our sales department, Tel. +49 711 68661 0 and receive the master password ("response"). Enter this master password at the 1st operating level for **PA**.

Important: Even if the user has not forgotten this password, the master password must be entered here. If the password is accepted, the user is in the parameter level selection and all passwords are deactivated. The user can change to the corresponding parameter level simply by pressing the **SET** key (**---** display).

The master password is no longer required. The passwords remain deactivated until the controller is disconnected from the power supply. If the user leaves the parameter level, it is sufficient to simply press the **SET** key for **PA** to return to the selection of the parameter levels.

4.4 Error messages

Message	Cause	Measure
H1	Overtemperature, temperature above the alarm limit from parameter **c7**	
L0	Undertemperature, temperature below the alarm limit from parameter **c8**	
E1L	Fault on sensor F1, short circuit.	Check sensor F1
E1H	Fault on sensor F1, breakage.	Check sensor F1
E2L	Fault on sensor F2, short circuit.	Check sensor F2
E2H	Fault on sensor F2, breakage.	Check sensor F2
E3L	Fault on sensor F3, short circuit.	Check sensor F3
E3H	Fault on sensor F3, breakage.	Check sensor F3
E4L	Fault on sensor F4, short circuit.	Check sensor F4
E4H	Fault on sensor F4, breakage.	Check sensor F4
E5	Door open too long.	Close the door
E6	High-pressure fault.	Check: Condenser fan and soiling
E7	Low-pressure fault.	System leaking, insufficient cooling agent
E10	External alarm.	
EP0	Internal controller fault.	Repair the controller
EP1	Error in the parameter memory.	Check all parameters
EP2	*Error in the data memory.*	*Repair the controller*
Pr	Internal: Test mode.	Briefly disconnect the controller from the mains voltage; if the message does not disappear -> repair
rtc	Internal clock error.	Reset clock; if the error does not disappear -> repair

The errors **EP0** and **EP1** block the control system. The control system is not enabled until the error has been eliminated. The error(s) **EP0** (and **EP2**) can only be corrected by repair. The errors are displayed alternately with the currently measured temperature.

4.5 Parameter description

A-- Alarms

A0 Assignment of alarm sensor
This parameter is used to set which sensor input is to be the alarm sensor.

A1 Upper limit value

A2 Lower limit value
The limit values are used to monitor the temperature of the cooling space. They are relative, i.e. run along with setpoint S1 of the cooling space. If the upper limit value is exceeded or if the the lower limit value is undercut, an alarm message is sent to **A15**. If [**A1** = 0] and/or [**A2** = 0] is/are set, the respective limit value alarm is inactive.

A3 Switching direction of the alarm relay
This parameter is used to specify whether the relay is to be closed or opened in the event of an alarm.

A4 Switching hysteresis for alarm
The hysteresis of the alarm contact is asymmetrical, i.e. set downwards at the upper alarm value and upwards at the lower alarm point.

A10 Alarm suppression time after temperature alarm
If the temperature of the cooling space rises and exceeds the limits set in **A1** and **A2**, a temperature alarm should normally be triggered. The suppression time set in **A6** can be used to delay the alarm.

A11 Alarm suppression time after defrosting
After defrosting, a temperature alarm is prevented for the set time in order to allow the system to return to normal operating conditions.

A12 Alarm suppression time after cooling on
An alarm message is suppressed for the set time after switching on the cooling system. This gives the refrigeration system the opportunity of approaching the working temperature range without triggering an alarm.
A13 Alarm suppression time for door open
This parameter defines if an alarm is to be triggered when the door is opened. If the door is closed again within the time specified here, no alarm is triggered.

A14 Behaviour after automatic clearing of the temperature alarm
This setting determines if a temperature alarm may clear itself automatically when the temperature is within the warning limits again or if it must be confirmed. This means, for example, that a temperature alarm which occurred during the night remains until the error is confirmed the next day. If the temperature alarm still present at the time of acknowledgement, the buzzer is switched off according to the setting in **A15**, but the warning message remains on the display until the temperature is within the warning limits. Once an alarm has been confirmed, it is automatically deleted.

A15 Buzzer and/or indication function if there is an alarm
This specifies whether a temperature alarm is displayed or not, and if the buzzer may sound. Furthermore, the user can specify here if the buzzer should recur after acknowledgement. The time is given in **A16**. The error message flashes on the display alternately with the temperature as long as the alarm persists. Several alarm messages are displayed in turn one after the other. Regardless of this, the alarm relay always signals the alarm.

A16 Buzzer recurring after acknowledgement
An alarm that has not been cleared is switched on again by the buzzer after the time set here. This only applies when the setting is [**A15**=6].

A17 Reset MIN/MAX memory
This parameter can be used to clear the MIN and/or MAX memory.

A18 Display of current MAX memory

A19 Display of current MIN memory
The current MAX/MIN memory can be called up here.

A20 High-pressure function:

Triggering until alarm
In the event of a high pressure signal, the compressor is switched off immediately and a message displayed via a parametrised switching input. If the high pressure signal disappears within 15 minutes, the error message is cleared and the compressor restarted. However, an alarm is only triggered via the alarm relay if the number of registered triggers specified here is exceeded within 15 minutes or if the signal lasts longer than 15 minutes. The system can only clear this error by disconnecting the mains (and after repair!).

A25 Low-pressure function:

Delay until alarm
If a low pressure signal is applied via a parametrised switching input and does not return within the time specified here, the compressor is switched off and an error message is displayed. The system can only clear this error by disconnecting the mains (and after repair!).

A99 Password for level A--
This parameter can be used to set the password for parameter level □□□.

b-- Keys and switch inputs (password-protected)

b11, b13, b15, b17 Function E1…E4
Certain functions can be assigned to the switching inputs.

B12, b14, b16, b18 Switching direction E1…E4
Determines if the switch input is operated as a normally open (normal) or normally closed contact (inverse).

B99 Password for parameter level b--
This parameter can be used to set the password for parameter level □□□.

c-- Control loop 1

c0 Cooling space sensor assignment
This parameter is used to set which sensor input is to be the sensor input of the cooling space sensor. The selected sensor must be set accordingly in the **H** parameters.

c1 Setpoint control loop 1 (Set1)

c2 Night boost/reduction circuit 1

c3 Setpoint control loop 1 (Set2)
This parameter can be used to set the setpoint. It is displayed directly by pressing the SET key and can also be adjusted. The setting range is determined by the setting in parameters **c7** and **c8**. The setpoint **c3** becomes active when the Set2 function is switched on via a key, a digital switching input, the internal clock or via the ST bus. The setpoint **c2** becomes active when the night boost or reduction function has been activated via a key, a digital switching input, the internal clock or via the ST bus. The value of **c2** is added to the currently active setpoint **c1** or **C3**.

c4 Switching direction of control loop 1
The switching direction for the control output can be set for the heating or cooling function. In the heating function, the control output is switched on if the actual temperature is lower than the set temperature. In the cooling function, it is the other way round.

c5 Hysteresis of control loop 1
This parameter specifies the control hysteresis. A small hysteresis allows more precise control, but also leads to more frequent switching of the relay.

c6 Control loop hysteresis mode
This parameter can be used to select if the hysteresis at the respective switching point is symmetrical or takes effect on one side. A hysteresis programmed on one side is applied below the setpoint for the heating function [**c4 = 0**] and above it for the cooling function [**c4 = 1**]. If the hysteresis is symmetrical, there is no difference.

c7 Upper setpoint limit

c8 Lower setpoint limit
The setpoints **c1** and**c3** can only be set within the limits specified here.

c10 Start protection after compressor start
This protection time is started at the same time as the compressor is switched on. After the compressor is switched off, it is prevented from being switched on again until this protection time has elapsed. This is to avoid switching on too often in order to increase the service life.

c11 Compressor start protection after compressor stop
This protection period is started at the same time as the compressor is switched off. This prevents the compressor from being switched on again until this protection period has elapsed. This is to avoid switching on too often in order to increase the service life.

c12 Compressor start protection after mains on
This prevents the control output from being switched on after "Mains On" until this protection time has elapsed. This can, for example, prevent several controllers from switching on and loading the power supply at the same time.

c15 Duty cycle in emergency operation

c16 Cycle time in emergency operation
These parameters can be used to select how the compressor should continue to run in the event of a sensor fault. In emergency operation, the compressor is operated in the cycle of **c16**. The duty cycle in **c15** is expressed as a percentage of the cycle time, where 100 % corresponds to continuous operation of the compressor and 0 % corresponds to the compressor being permanently switched off. In the deep-freeze area, the compressor should continue to run to prevent the goods from thawing. However, in the normal cooling range above 0 °C, continued operation could lead to frost damage. No defrosting takes place during emergency operation.

c20 Assignment of sensors for the "Superfrost" function
This parameter is used to set which sensor input is to be assigned to the "Superfrost" function. Depending on the sensor version, it can also serve as a core or product temperature sensor. The selected sensor must be set accordingly in the **H** parameters.

c21 "Superfrost": Time limit, "Shock freezing", "Max. cooling capacity"

c22 "Superfrost.": Temperature limit, "Shock freezing", "Max. cooling capacity"

c23 "Superfrost": Switch-off, "Shock freezing", "Max. cooling capacity"
If this function is switched on, the lower warning limit is deactivated and the compressor is switched on permanently. **c23** specifies if an automatic shutdown is to take place and if it is to be limited only in time or also by the temperature. The time limit is defined by **c21** and the temperature condition by **c22**.

c30 Assignment of the sensor for humidity control
This parameter is used to set which sensor input is to be assigned for the humidity. If no sensor is assigned, humidity control is deactivated. However, in function **c39** = 2, a relay can be switched via the humidity key function. The selected sensor must be set accordingly in the **H** parameters.

c31 Humidity setpoint

c32 Humidity at night setpoint offset
For [**c39** > = 2] and assigned sensor, the control is set to the value set here. The value in the **c32** parameter is added to **c31** if night switching is active.

c34 Humidity control mode
In the [**c39 = 1**] setting, only the evaporator fan is set to continuous operation for humidification. This transports the humidity that forms on the evaporator back into the cooling space. The function is switched manually via the humidity function (see b parameter). In the [**c39 = 2**] setting a relay is switched for humidification, which distributes humidity in the form of mist, for example, in the cooling space. If no sensor is specified, this relay can be switched manually via the humidity function (see b parameter). In the [**c39 = 3**] setting, the compressor is switched on for dehumidification. To prevent the cooling space from becoming too cold, reheating is switched in accordance with parameters **c37** and **c38**. If no sensor is specified, this function is deactivated.

c35 Hysteresis
This parameter specifies the control hysteresis. A small hysteresis allows more precise control, but also leads to more frequent switching of the relay.

c36 Humidity hysteresis mode
This parameter can be used to select if the hysteresis at the respective switching point is symmetrical or takes effect on one side. A hysteresis programmed on one side is applied below the setpoint for humidification [**c39 = 2**] and above it for dehumidification [**c39 = 3**]. If the hysteresis is symmetrical, there is no difference.

c37 Setpoint offset for reheating

c38 Hysteresis for c37
In the dehumidify function [**c39 = 3**], the compressor is switched on to reduce the humidity from the cooling space. Reheating can be switched on to prevent the chilled goods from becoming too cold. For this purpose, the value in **c37** is added to the current cooling space setpoint and the reheating is switched on if the value falls below the calculated value (see **U** parameter). The hysteresis specified in **c38** is always set above the setpoint.

c39 Humidity setpoint limit, top

c40 Humidity setpoint limit, bottom
The setpoints **c31** and **c33** can only be set within the limits specified here.

c99 Password for parameter level c--
This parameter is used to set the password for parameter level **c--**.

d-- Defrosting control loop 1

d0 Assignment of evaporator sensor (defrost sensor)
This parameter is used to set which sensor input is to be the sensor input of the evaporator/defrost sensor. The selected sensor must be set accordingly in the H parameters.

d1 Defrosting interval
The defrosting interval determines the time after which defrosting is initiated. The defrosting interval is restarted at the start of defrosting. Defrosting can also be started by pressing the **UP** key ("Manual defrosting") for at least 3 seconds or by pressing a parametrised key. Defrosting can also be started in real time via the internal 7-day timer. The controller starts cooling immediately after switching on and starts the first defrosting after the interval set in **d1** has expired. If **[d1** = 0] is set, no automatic defrosting takes place.

d2 Type of defrosting
This parameter is used to specify if defrosting is to take place and, if so, how the defrosting is to take place. The options for defrosting are for the compressor simply to be switched off, an electric defrosting heater or via hot gas. Electrical defrosting always takes place after a compressor pause that is specified in **d9**. Hot gas defrosting always takes place immediately after a cooling phase. In addition, the **d7** and **d8** parameters can be used to determine if the cooling space is to be cooled down before defrosting.

d3 Defrosting temperature
A defrosting process is terminated when the temperature set here has been reached at the evaporator. If defrosting takes too long, the time limit set in **d4** takes effect.

d4 Defrosting time limit
This sets the maximum time available for defrosting. After the time set here, the defrosting process is also stopped if the evaporator was not warm enough to be ice-free. No error message is displayed.

d7 Temperature difference for previous cooling down

d8 Maximum cooling time for previous cooling down
In order to prevent unnecessary heating of the cooling space, cooling down before the defrosting phase can be set here.

d9 Compressor at least off before electrical defrosting starts
If the compressor is on during an electrical defrosting request, the start of defrosting is delayed for the time period after compressor stop specified here.

d10 Drip off time
Immediately after the end of defrosting, the drip-off time or dewatering time follows in order to allow the evaporator to drip off. During this time, the compressor, defrosting and evaporator fan outputs are switched off.

d11 Drip tray heating run-on time
This specifies how long the drip tray heater is to remain switched on after defrosting so that the water dripping off does not freeze again.

d20 Forced release display after defrosting
With **L4** = 0, the display can be frozen during defrosting. After successful defrosting, the frozen display is enabled again at the end of the time parametrised here at the latest. If 0 is set, no forced release takes place. The display is therefore only enabled when the temperature falls below the frozen value.

d99 Password for parameter level d--
This parameter is used to set the password for parameter level d--.

F-- Fan control loop 1

F8 Fan speed standard operation, Set1
Variable for the fan speed during normal standard operation and active Set1.

F9 Fan speed during defrosting, Set1
Variable for the fan speed during defrosting and active Set1.

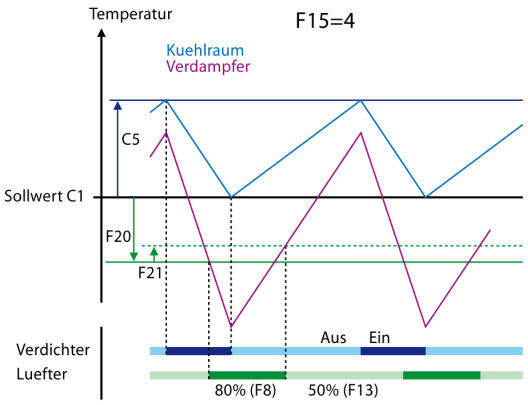

F10 Fan speed standard operation, Set2
Variable for the fan speed during standard operation and active Set2.

F11 Fan speed during defrosting, Set2
Variable for the fan speed during defrosting and active Set1.

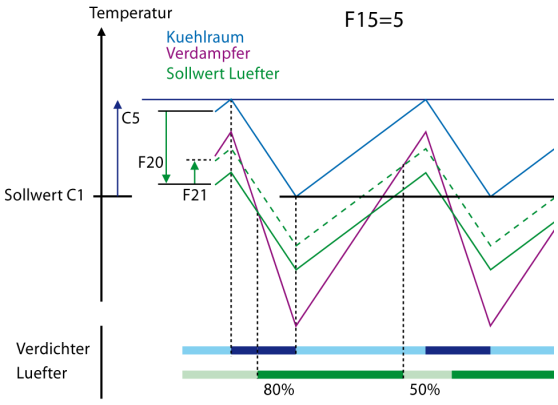

F12 Start boost time (in seconds)
If necessary, the fan can be switched on at max. speed for the time period set here, so that it starts in a stable manner. This parameter only takes effect if the fan is switched on from standstill.

F13 Minimum speed
Here, the lowest value of voltage at which a connected fan still runs is set.

F15 Evaporator fan: Fan mode standard operation
This parameter specifies how the fan is switched on in standard operation. If the controller is in a defrosting phase, the fan is controlled via parameter **F16**. In continuous operation [F15 = 1], the fan runs when the controller is switched on. In continuous operation with drip interruption setting [F15 = 2], the fan behaves as in continuous operation but is switched off for the duration of **F19** when defrosting has ended. After the drip-off time in **F19** has elapsed, the fan is switched on again. If the compressor is switched on before the time has elapsed, the fan is immediately restarted (after the delay in **F17**). In the Compressor On setting [F15 = 3], the fan is switched on and off with the compressor. To prevent compressors and fans from overloading the power supply by starting together, a delay can be set using **F17**.

Setpoint for fan as fixed value
If [F15 = 4], the evaporator fan reacts to fixed temperature setpoint **F20** (set as the difference to the cooling space setpoint **c1**). The temperature from the evaporator sensor serves as the measured value. Whenever the evaporator is colder than setpoint **F20**, the fan runs at maximum speed as defined in parameter **F8**. If the evaporator is too warm (setpoint **F20** plus hysteresis **F21**), the fan runs at the minimum speed defined in **F13**.

Setpoint for fan as differential temperature
If **[F15 = 5**], the evaporator fan does not react to a fixed setpoint, but to a temperature difference between the evaporator and the cooling space. The temperature from the evaporator sensor serves as the measured value. The setpoint for the fan is formed from the cooling space temperature plus the difference of **F20** and runs parallel to the cooling space temperature. This results in demand-oriented behaviour where the fan can run at maximum speed (as defined in parameter F8), even at higher temperatures. Only the evaporator must be correspondingly colder than the cooling space. If the evaporator is too warm (differential setpoint plus hysteresis **F21**), the fan runs at the minimum speed defined in **F13**.

F16 Defrosting fan mode
This parameter is used to specify if the fan is to be switched on or off during defrosting. This parameter has no effect in temperature-controlled fan mode [**F15**4 or 5].

F17 Delay after compressor on
To ensure that the compressor and fan do not unnecessarily load the power supply by switching on together, this parameter can be used to set a switch-on delay for the fan. It has no effect in temperature-controlled fan mode.

F18 Delay after defrosting
After defrosting is complete, the switching on of the fan is delayed for the time period set here. This parameter is valid in all set fan modes.

F19 Drip pause time (with F15 = 2)
If the fan runs continuously, there is a small temperature fluctuation with high humidity. In the "With compressor on" mode, however, the temperature fluctuation is greater and the humidity lower. This parameter is now used to combine the two advantages. The fan operates continuously and is switched off for the time specified here when the compressor is switched off. This allows the humidity that forms on the evaporator to drip off.

F20 Evaporator fan control offset (for F15 = 4 or 5)
For [**F15** = 4], the following applies: The basis is the setpoint for control loop 1(**c1** or **c3**). If the evaporator temperature is below the setpoint, the evaporator fan is switched on. This switch point can be shifted by the value set here. For [**F15** = 5], the following applies: The temperature difference between the cooling space (sensor from c0) and evaporator temperature (sensor from d0) determines the switching point for the evaporator fan. If the evaporator temperature is below the cooling space temperature, the evaporator fan is switched on. This switch point can be shifted by the value set here.

F21 Hysteresis (with F15 = 4 or 5)
The control hysteresis is always set above the calculated switching point.

F50 Condenser sensor assignment
This parameter is used to set which sensor input is to be the sensor input of the condenser sensor. The selected sensor must be set accordingly in the **H** parameters.

F51 Condenser fan: Setpoint
Only with [**F65** = 3]. If the value set here is exceeded, the condenser fan is switched on.

F54 Condenser fan: Switching hysteresis
Only has an effect in the setting [**F65** = 3]. The hysteresis is set on one side above the setpoint of parameter **F51**.

F58 Condenser fan: Delay after compressor start
Switch-on delay of the condenser fan after the compressor has been switched on.

F59 Condenser fan: Delay after compressor stop
Running-on of the condenser fan after the compressor has been switched off.

F65 Condenser fan function
0: No function, i.e. the condenser fan is off
1: Condenser fan always on
2: On when the compressor is on
3: Condenser fan is controlled by the setpoint in parameter F51. In the case of a sensor fault, the fan behaves as in setting [**F65** = 2].
4: As 3, but the fan is set continuously via a voltage output. The proportional range is specified in parameter **F66**.

F66 Condenser fan: P-controller proportional range
For setting the proportional range required for **[F65 = 4]** in which the fan is to be placed.

F67 Condenser fan: Minimum speed
The lowest value of voltage at which a connected fan still runs is set.

F68 Condenser fan: Start boost
This specifies the time with which a stationary fan is switched on with max. voltage so it can start up in a stable manner.

F99 Password for parameter level F--
This parameter can be used to set the password for parameter level **F--**.

H--Temperature probes and sensors

H1 Mains frequency
This parameter is used to select the mains frequency.

H11, H21, H31, H41 Actual value of sensors F1..F4
The temperature value displayed here is used for control purposes. It is calculated from: Actual control value = (actual measured value * weight factor) + actual value correction. The actual value correction and weighting factor must be specified in the following parameters. In special applications (refrigerated display cabinets or similar), this corrects any actual value deviation caused by unfavourable positioning of the sensor.

H51 Weighted average of sensors F1 and F2
This calculated average value of sensors F1 and F2 can be useful for the control loop or the display. It is calculated as follows: **H51** = (**H53** x **H11** + (100 – **H53**) x **H21**) / 100

H12, H22, H32, H42 Sensor calibration F1...F4 actual value correction
This parameter can be used to correct actual value deviations caused, for example, by sensor tolerances, extremely long sensor cables or by structural protective circuits (e.g. Ex barriers). The value set here is added to the measured value.

H13, H23, H33, H43 Weighting factor F1…F4
This parameter can be used to correct actual value deviations due to unfavourable positioning of the sensor. The controller measured value is multiplied by the value set here.

H14, H24, H34, H44 Sensor selection F1…F4
This parameter is used to set the sensor type. Depending on the hardware, not all sensor types can be supported. For the NTC sensor, a parallel resistor must also be connected.

H15, H25, H35, H45 Software filter F1…F4
This parameter is used to determine the number of measured values from which an average value is calculated. An average value is formed from the last measured values, whereby the oldest measured value is deleted (so-called "moving average filter").

H16, H26, H36, H46 F1…F4: Display at 0/4 mA
If **H14**/**H24**/**H34**/**H34** = 7 or 8 (0...20 mA or 4...20 mA linear sensor) is selected for the sensor selection, this parameter can be used to determine which value is to be displayed at a current of 0 or 4 mA. The display value for 20 mA is specified in the next parameter. The actual measured value is calculated as linear interpolation between these two values.

H17, H27, H37, H47 F1…F4: Display at 20 mA
If **H14**/**H24**/**H34**/**H34** = 7 or 8 (0...20 mA or 4...20 mA linear sensor) is selected for the sensor selection, this parameter can be used to determine the value that is to be displayed at a current of 20 mA. The display value for 0 or 4 mA is specified in the previous parameter. The actual measured value is calculated as linear interpolation between these two values.

H53 Weighting of sensor F1 for display H51 (weighted average value of sensors F1 and F2)
This calculated average value of sensors F1 and F2 can be useful for the control loop or the display. It is calculated as follows: **H51** = (**H53** x **H11** + (100 – **H53**) x **H21**) / 100

H99 Password for parameter level H--
This parameter can be used to set the password for parameter level □□□.

J-- Predefined parameter sets (password-protected)

J1 Internal: Active data set
This parameter is used to set specific predefined data sets. The data sets are specified by Störk-Tronic. If a new data set is imported, all previously set parameters are overwritten. They can then be freely changed.

J98 Password for entering the level selection
This parameter can be used to set the password for level selection, i.e. when **PA** is displayed. In the standard version, access to the level selection is blocked with the password **-19**. This parameter cannot be set on the controller itself, but only via the ST bus.

J99 Password for parameter level J--
This parameter is used to set the password for parameter level **J--**. In the standard version, access to parameter group **J--** is blocked by password **- 19**.

L-- Networking and display (password-protected)

L0 ST bus, own address
The controller can be addressed at the address set here via the bus. Each bus device must have its own address and no addresses may occur more than once.

L2: Temperature scale
If the value of the data transfer is a temperature, it is converted to the unit set here for the display.

L3: Actual value display mode
The measured values can be rounded to half or whole numbers on request. All parameter settings and setpoints are displayed with a resolution of 0.1 K.

L4: Parameter address of displayed measured value
The measured values are arranged in a list and can be requested via an address within this list.

0	Display of the last temperature before defrosting
1	Cooling space temperature
2	Evaporator temperature
3	Evaporator fan variable
4	Cooling space setpoint
5	Condenser temperature
6	Condenser fan proportional result
7	Condenser fan variable
8	Condenser fan setpoint
9	Display via sample bottle
10	Min. temperature
11	Max. temperature
12	Circuit 2 temperature
13	Circuit 2 setpoint
14	Time
15	Sensor F1 direct
16	Sensor F2 direct
17	Sensor F3 direct
18	Sensor F4 direct
19	Sensor F5 direct

L6 Software version
The software version is displayed here.

L7: Display during standby
The setting in **L7** can be used to specify how the standby state is displayed.

L40 Enable screen (bits 0..7)

L41 Enable screen (bits 8..15)
A binary screen is used here to specify which functions can be enabled using the bus. The bits have the following meanings:

	Bit	Value	Function
L40	0	1	Controller on/off
	1	2	Control loop 1 on/off
	2	4	Control loop 2 on/off
	3	8	Control loop 1: Defrosting request
	4	16	Control loop 1: Superfrost request
	5	32	Control loop 1: Reserved
	6	64	Control loop 1: Set1/Set2 changeover
	7	128	Control loop 1: Day/night changeover
L41	8	1	Control loop 2: Defrosting request
	9	2	Function A (light 1)
	10	4	Function B (light 2)
	11	8	Function C
	12	16	Function D
	13	32	Function E
	14	64	Function F
	15	128	Reserved

To determine the value to be parametrised, the corresponding values must be added together.

L42 Enable for deleting counters/run times
Here, the deleting of the run times, the relay counters and the min./max. memory is enabled for 10 minutes. The parameters T98, N98 and A17 can only actively delete the corresponding timers, counters or memory locations within these 10 minutes. After the 10 min expire, the enable is removed. The deleting of the min./max. memory by a function assignment of the keys is not affected by this.

L99 Password for parameter level L--
This parameter is used to set the password for parameter level **L--**.

U-- Relay contacts and lamps (password-protected)

U1 ... U8 Function of relays K1...K8
Assignment of the internal output signals to the corresponding relays.

U9 Function of triac

U10 Triac power limitation function
With **U9**, any function can be assigned to the triac. If the selected signal is active, the output is set to the limit set in parameter **U10**. The limitation is to be evaluated differently depending on the connected consumer. In the [**U9 = 4**] setting (condenser fan), the **F50** – **F68** parameters are also evaluated. The **U10** parameter limits the max. signal.

U11 Upper limit U10

U12 Lower limit U10
The power limitation can only be set within the limits specified here.

U99 Password for parameter level U--
This parameter is used to set the password for parameter level **U--**.

Y-- Control loop 2 (password-protected)

Y0 Sensor assignment for an independent 2nd control loop (thermostat)
This parameter is used to set which sensor input is to be assigned to the 2nd control loop.

Y1 Control loop 2: Setpoint
The setpoint for the 2nd control loop (thermostat) is set here. If a key is parametrised accordingly, the setpoint can also be displayed and set directly by the key.

Y2 Control loop 2: Absolute or DeltaW setpoint
The value in **Y1** is used in the setting **Y2 = 0** as the absolute setpoint or, with **Y2** = 1, as the sum of **Y1** and the current cooling space setpoint (**c1**, **c2** or **c3**) for controlling control loop 2.

Y4 Control loop 2: Switching direction
Heating contact or cooling contact.

Y5 Control loop 2: Hysteresis
This parameter specifies the control hysteresis. A small hysteresis allows more precise control, but also leads to more frequent switching of the relay.

Y6 Control loop 2: Hysteresis mode
This parameter can be used to select if the hysteresis at the respective switching point is symmetrical or takes effect on one side. A hysteresis programmed on one side is applied below the setpoint for the heating function [**Y4 = 0**] and above it for the cooling function [**Y4 = 1**]. If the hysteresis is symmetrical, there is no difference.

Y7 Control loop 2: Setpoint limit, top

Y8 Control loop 2: Setpoint limit, bottom
These parameters limit the setting range of the **Y1** setpoint so that the end user does not set any invalid values.

Y9 Control loop 2: Function in the event of a sensor fault
This specifies if the controlled output contact opens or closes in the event of a fault in the assigned sensor.

Y10 Control loop 2: Defrost interval
The defrosting interval determines the time after which defrosting is initiated. At the start of defrosting, the defrosting interval is restarted, resulting in periodic defrosting with a fixed time interval.

Y11 Control loop 2: Defrost time limit
This sets the maximum time available for defrosting.

Y99 Password for parameter level Y--
This parameter is used to set the password for parameter level **Y--**.

4.6 Technical data for control box ST 200

Analogue inputs	**F1:** Pt100/PTC resistance sensor, cooling space **F2:** Pt100/PTC resistance sensor, evaporator **F3:** PTC resistance sensor measurement range: Pt100 - 99.0 ... 150 °C PTC - 55.0 ... 150 °C **F4:** Humidity sensor, 4 … 20 mA Measurement range: 0 … 100 % rH Measurement accuracy based on the controller at 25 °C: +/-0.5 K and +/-0.5 % of the measurement range.
Outputs	**K1:** Relay, 30(9) A/250 V~, normally open contact, compressor **K2:** Relay, 16(2.2) A/250 V~, normally open contact, defrosting **K3:** Relay, 16(2.2) A/250 V~, normally open contact, light **K4:** Relay, 16(2.2) A/250 V~, normally open contact **S1:** Voltage output for DC fans: 0..24 V, max. 2 A
Displays	One three-digit LED display for temperature indication, 7 mm high, red 7 LED lamps for status displays.
Power supply	90…250 V~ 50/60 Hz, max. 16 A
Connections	WAGO plug-in terminals.
Environmental conditions	Storage temperature -20...+70 °C Operating temperature 0...55 °C Relative humidity max. 75 % r.H., no condensation
Weight	Approx. 1400 g
Degree of protection	IP20
Interface	**2x ST BUS communication interface** **Local networking** (red indicator, connection to display or satellite display). Interface driver: RS485, 57600 baud, CAT5 cable, length max. 1000 m **Remote networking** (blue indicator, connection to Commander, PC,...) Interface driver: RS485, 57600 baud, CAT5 cable, max. length 1000 m The remote networking must be constructed in line topology and terminated on both sides with a resistor of 120 Ohm each.
Housing	Material: Ultramid® C3U Dimensions: 185 mm x 170 mm x 76 mm (excluding connections) Earth, see item 1.5

5 Customer service

In the event of any malfunctions or problems during installation and commissioning of the appliance, the customer department must be informed.

First check the mains cable and fuse. Serial number and type (data on rating plate).

Switzerland:

Beer Grill AG
Allmendstrasse 7
CH-5612 Villmergen, Switzerland

Service mail: service@beergrill.com
Service tel. +41 56 618 78 28

Germany:

SERVATOR ServiceLine GmbH
Lindenweg 36-42
D-97999 Igersheim, Germany

Service tel. +49 7931 55555

Austria:

Carrier Kältetechnik Austria Ges.mbH
Altwirthgasse 6-10
A-1230 Vienna, Austria

Service tel. +43 810 955 033

Further contact addresses can be found on our homepage:
www.beergrill.com